Cassette awning

markilux 970

Aesthetics and technology perfectly united – the compact cassette awning in a timeless, purist design.

DESIGN AWARD 2017

PLUS X AWARD
2016 ausgezeichnet für:
Innovation
High Quality
Design
Bedienkomfort
Funktionalität

GERMAN DESIGN AWARD WINNER 2017

PLUS X AWARD
honoured as:
BEST PRODUCT 2017

markilux.com

markilux
safe timeless beautiful

Product characteristics

Wind resistance class 2
Beaufort 5 → 7.5–10.4 m/s → 28–37 km/h → 17-23 mph

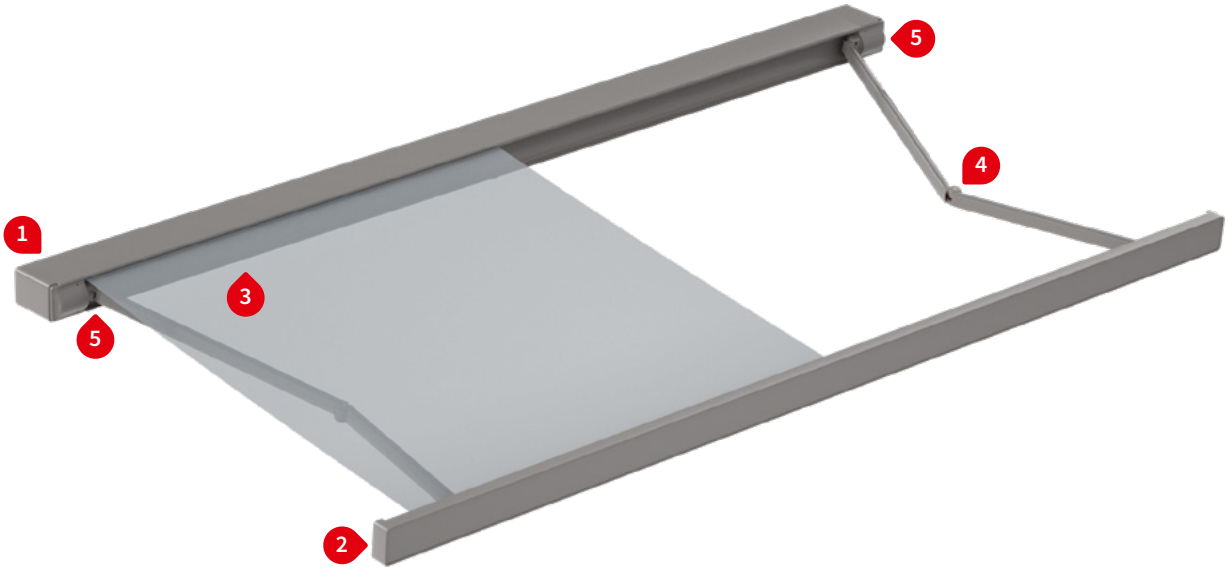

1 Face fixture, Maximum pitch of 30°

1 Top fixture

1 Top fixture, view from the rear and below

2 Shadeplus / drop valance [1)]

4 Bionic tendon made of high-tech fibres for optimum power transference

3 LED-Line recessed in the cassette [1)]

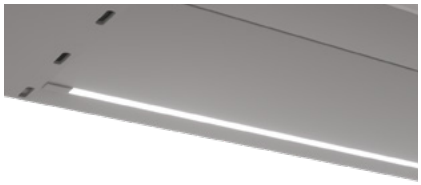

3 LED spotlights underneath the cassette [1)]

2 Shadeplus / drop valance [1)], during extension

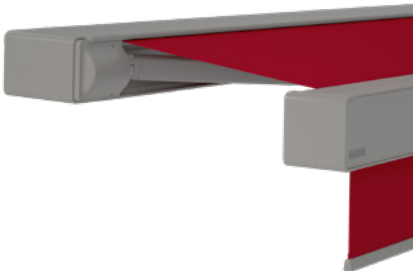

5 Arm bearer with tilt device technology, integrated windlock mechanism

1) optional configuration

Product characteristics

Description

- angular cassette awning built in an unobtrusive style, with ingenious accessory options and unique fixture technology.

Special features

- option of a drop valance up to a projection of 300 cm – vertical protection against low-lying sun, wind and inquisitive glances integrated into the front profile, can be operated manually or by motor
- option of directional LED spotlights fitted to the underside of the cassette – provide an appealing atmosphere in the evening
- various front panel colours can be combined with the standard awning frame colours
- the special cassette profile surrounds the roller tube even when the awning is extended and lends the awning a harmonious, closed appearance
- the straight lines with smooth front panel suit a minimalist building style perfectly
- the design characteristics allow the awning to be fitted into niches and reveals
- the virtually invisible face and top fixture brackets mean the awning cassette lies flat against the building
- the tilt device technology with integrated windlock mechanism ensures the awning closes cleanly

Dimensions

- cassette in the standard version: depth 266 mm, height 140 mm
- single unit: minimum width 195 cm at the smallest projection of 150 cm maximum width 500 cm at the largest projection of 350 cm or 600 cm at a maximum projection of 300 cm

Roller tube and lateral bearings

- round roller tube Ø 85 mm with keyway, galvanised steel – provides excellent stability and ensures near perfect cover performance even at the largest widths
- the cassette side cap is made of die-cast aluminium, powder coated

Awning profiles

- extruded aluminium, in façade quality, powder coated
- two-piece cassette with integrated brush seal – providing the awning cover with optimum protection against the elements
- angular front profile with integrated rain gutter and a smooth front panel

Folding arms

- profiles in extruded aluminium, in façade quality powder coated
- moving parts made of drop-forged aluminium – the arms are therefore extremely fracture resistant
- pivot bolts in stainless steel run in Teflon-coated bronze bushes – practically maintenance free, virtually silent and extremely hard-wearing
- power transference via the innovative bionic tendon at the elbow joint, made of high tensile, high-tech fibres – low in friction, noiseless, insensitive to corrosion and UV resistant

Side caps

- the cassette end caps are made of high-quality plastic, powder coated
- the internal caps to cover the arm bearers at the side are made of die-cast aluminium
- the front profile end caps are made of die-cast aluminium, powder coated, with water drainage holes

Fixture brackets

- face fixture, top fixture, eaves fixture
- extruded aluminium, powder coated
- awning pitch adjustment range 5° to 30°
- spacer plates, stand-off brackets and other accessories are available

01
02
03
04
05

Frame and styling panel colours

markilux awning colours without surcharge

traffic white, RAL 9016

metallic aluminium, RAL 9006

grey brown, similar to RAL 8019

off-white textured finish, 5233 [1)]

stone grey metallic, 5215 [1)]

anthracite metallic, 5204[1)]

Havana brown textured finish, 5229 [1)]

Non-standard powder-coated finish

Bespoke frame colours incur a surcharge – metallic, finely textured, pearl and matt finishes as well as other colour ranges (DB, Tiger etc.) on request. All frame colours are available at a surcharge with enhanced corrosion protection.

Colours may differ slightly from those depicted in both hue and finish.

1) textured finish

Combination Possibilities

All standard front panel colours can be combined at will with the standard frame colours [2)]

Frame stone grey metallic, 5215
Front panel anthracite metallic, 5204

Frame off-white textured finish, 5233
Front panel anthracite metallic, 5204

Frame traffic white, RAL 9016
Front panel metallic aluminium, RAL 9006

Frame anthracite metallic, 5204
Front panel stone grey metallic, 5215

2) illustrations by way of example; Colours may differ slightly from those depicted in both hue and finish.

Additional front panel colours

The additional front panel colours can be combined at will with all the standard frame colours [1)]

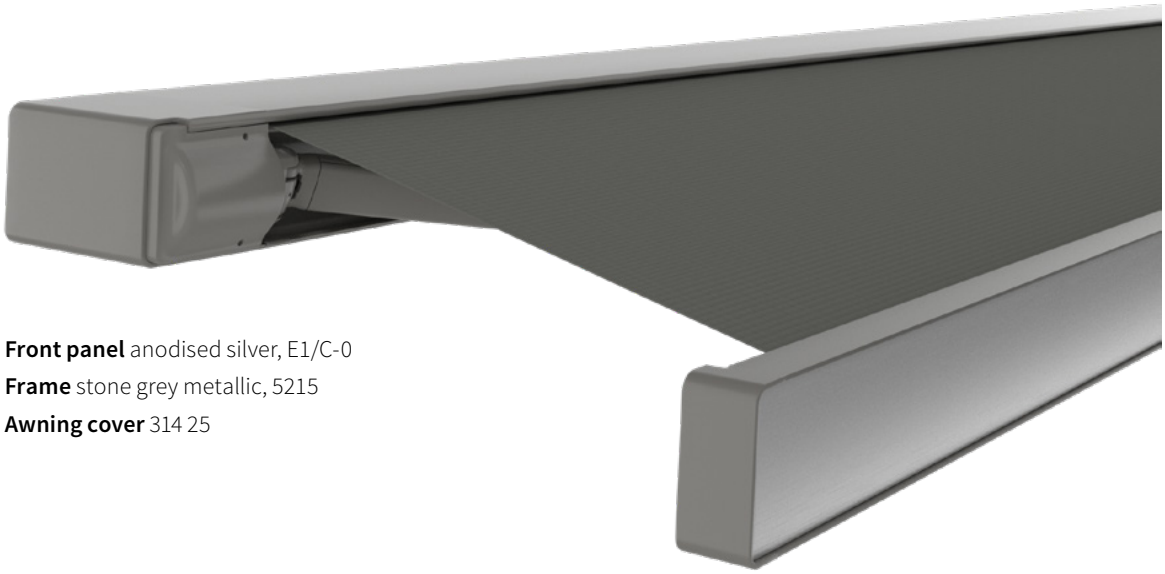

Front panel anodised silver, E1/C-0
Frame stone grey metallic, 5215
Awning cover 314 25

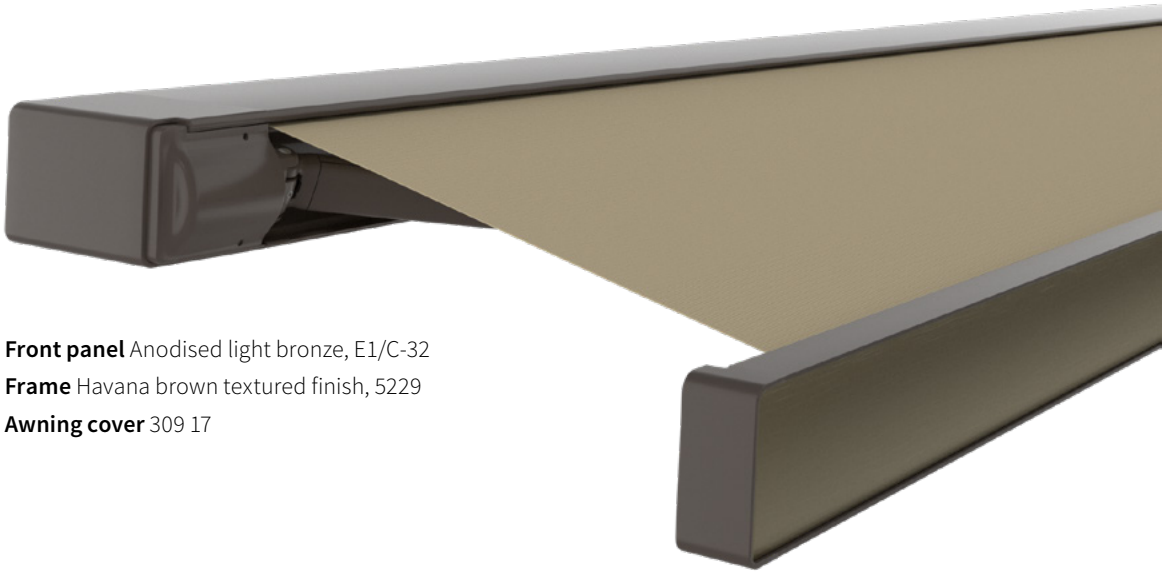

Front panel Anodised light bronze, E1/C-32
Frame Havana brown textured finish, 5229
Awning cover 309 17

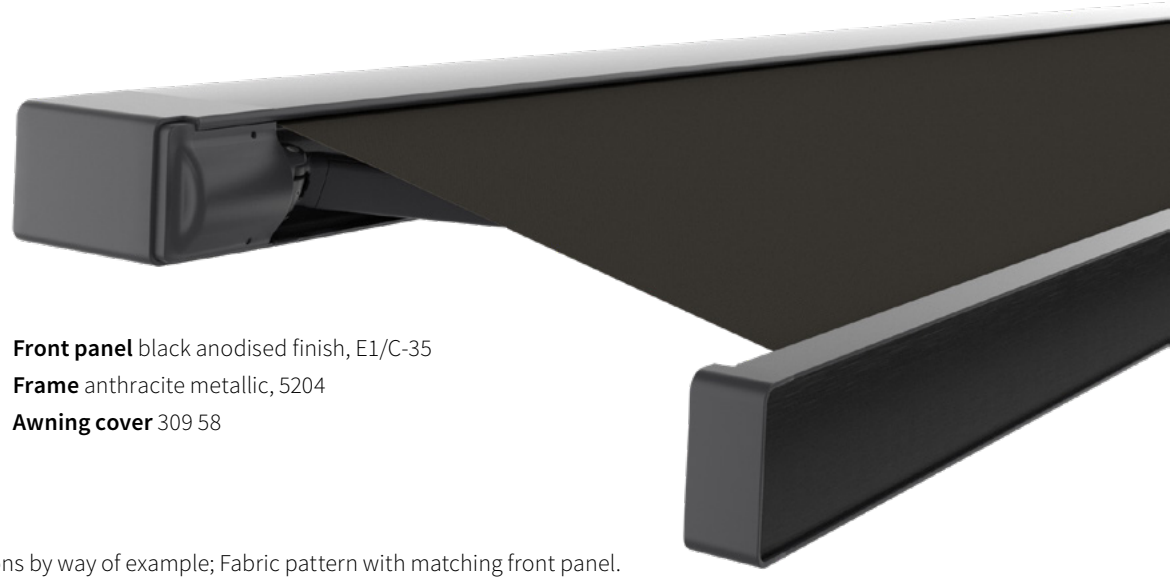

Front panel black anodised finish, E1/C-35
Frame anthracite metallic, 5204
Awning cover 309 58

1) illustrations by way of example; Fabric pattern with matching front panel. Colours may differ slightly from those depicted in both hue and finish.

01
02
03
04
05

Dimensions and configuration options

Single unit

		Awning width								Minimum awning width	
		250	300	350	400	450	500	550	600	Motor	Crank handle
Order dimensions		195 – 250	251 – 300	301 – 350	351 – 400	401 – 450	451 – 500	501 – 550	551 – 600	62	62
H	150	1)								195	195
	200	1)								245	245
	250	—	1)							295	295
	300	—	—	1)				2)	2)	345	345
	350	—	—	—	1) 2)	2)	2)	—	—	395	395

dimensions in cm

1) = please note the minimum widths!
2) = drop valance not available
H = drop

= 2 folding arms, 2 brackets

62 = 2 standard arms

Operation	standard	optional
manual operation	✓	—
spring-assisted crank handle	—	✓
hard-wired motor	—	✓
silentec motor (optionally with an external io / RTS receiver)	—	—
radio-controlled motor io, 868 MHz	—	✓
radio-controlled motor RTS, 433 MHz	—	✓
radio-controlled motor RTS, 433 MHz with manual override	—	—

Coupled Awning
not available

Awning cover	fabric range no.	standard	optional
sunvas	301.. / 309..–315..	✓	—
sunvas perla	370 ..	—	✓
sunsilk	324.. / 325.. / 328.. / 369..	✓	—
sunsilk perla FR	374.. / 375..	—	✓
perfotex	331.. / 332..	—	—
transolair	338.. / 339 ..	—	—
vuscreen Alu	317..	—	—
Soltis Perform 92	92-20..	—	—
glass fibre screen	272..	—	—
valance, 20 cm		—	✓ 1)

1) can only be attached to a drop valance

Shadeplus 1) 2)	standard	optional
height 170 cm		
maximum awning projection 300 cm 3)		
manual operation	✓	—
hard-wired motor	—	✓
radio-controlled motor io, 868 MHz	—	✓
radio-controlled motor RTS, 433 MHz	—	✓
cover	sunvas / sunsilk / transolair / vuscreen Alu	

1) a shadeplus is impractical for fixture in a top well and in a reveal if top or eaves fixture is used

2) the seams in covers made from fabrics 120 cm wide run across the awning. Textured and flecked fabrics will take on a slightly different appearance from that of the awning cover as a result

3) folding arms in a taller version (with cable conduits); Not available in the dimensions 501 cm – 600 cm × 300 cm

Optional accessories

drop valance, manual or motor operation
LED-Line recessed in the cassette
LED spotlights underneath the cassette
infrared heater 2500 W
infrared heater 2500 W with integrated radio-controlled receiver, 868 MHz io
automatic controls (light, wind, rain)

N.B! Important background information can be found in the chapter “Optional Accessories”.

Fixture options

face fixture bracket left, 100 mm	72826.
face fixture bracket right, 100 mm	72827.
spreader plate A 430 × 160 × 12 mm	72870.
spreader plate B 300 × 400 × 12 mm	75325.
spreader plate A 310 × 130 × 12 mm	72526.
markilux panel 250 × 230 × 49 mm	76308.
markilux panel durchgehend	76380.
stand-off bracket 80 mm – 300 mm	72872.
top fixture bracket left, 90 mm	72860.
top fixture bracket right, 90 mm	72861.
eaves fixture bracket left, 90 mm, 150 mm top plate	72874.
eaves fixture bracket right, 90 mm, 150 mm top plate	72875.
eaves fixture bracket 90 mm, 270 mm top plate	71659.
flat plate and angled bracket for eaves fixture, machine finish aluminium, 500 mm plate	716620
spreader plate 260 × 60 × 12 mm for eaves fixture bracket 90 mm	75383.

Lighting options

LED-Line recessed in the cassette

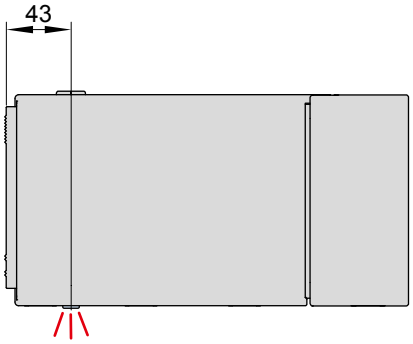

dimensions in mm

Technical specification

Operating voltage	230 V, 50 Hz
power output per metre	10 W / metre
number of LEDs per metre	120 units / m
Light source	LED (12 V)
Number of transformers	1 unit
Light temperature	warm white
IP protection class	IP 44
Service life	approx. 15.000 h

Controls	standard	optional
radio-controlled dimmer io, 868 MHz	✓	—
radio-controlled dimmer RTS, 433 MHz	✓	—

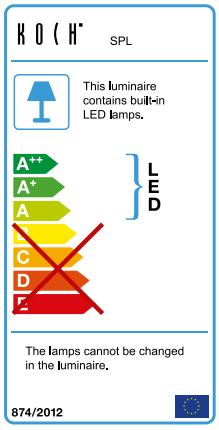

Electrical connection:
power supply cable H05RN-F 3G1 (3 × 1 mm²) with open end

Lighting options

Directional LED spotlights underneath the cassette

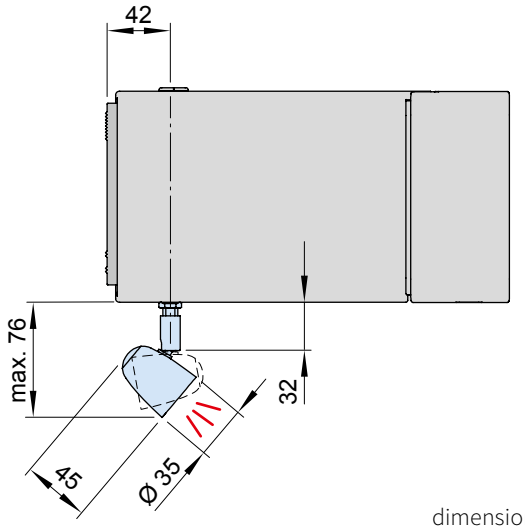

dimensions in mm

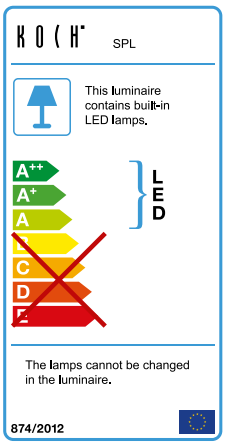

Electrical connection:
power supply cable H05RN-F 3G1 (3 × 1 mm²) with open end

Technical specification	
Operating voltage	230 V, 50 Hz
Power output of one LED spotlight	5 W
Light source	LED (12 V)
Number of transformers	1 unit
Light temperature	warm white
IP protection class	IP 44
Service life	approx. 20.000 h

Controls	standard	optional
radio-controlled dimmer io, 868 MHz	✓	—
radio-controlled dimmer RTS, 433 MHz	✓	—

LED spotlight distribution in the front profile

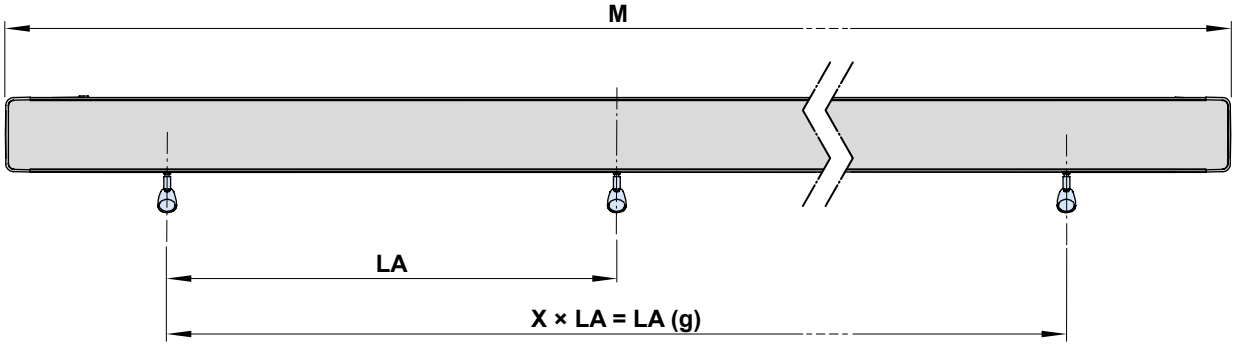

awning width	no. of spotlights	LA	LA (g)
195–250	3	75	150
251–300	3	98	196
301–350	3	98	196
351–400	4	98	294
401–450	4	98	294
451–500	5	98	392
501–550	5	98	392
551–600	6	98	490

dimensions in cm

LA (g) = distance between the spotlights (total)
M = *order dimension* = awning width

Bracket fixture range

Face fixture

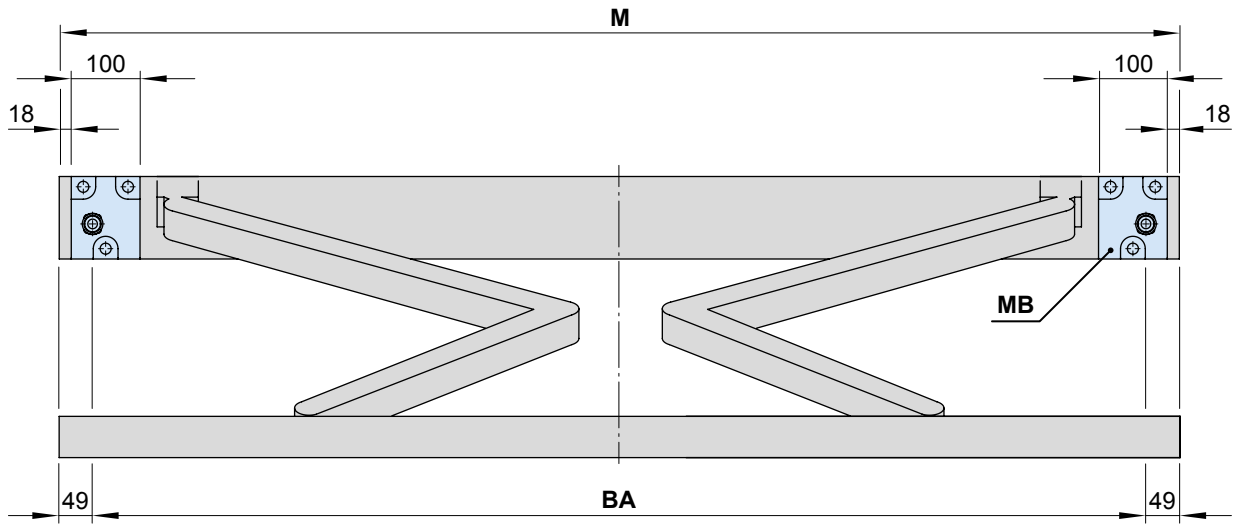

Top fixture

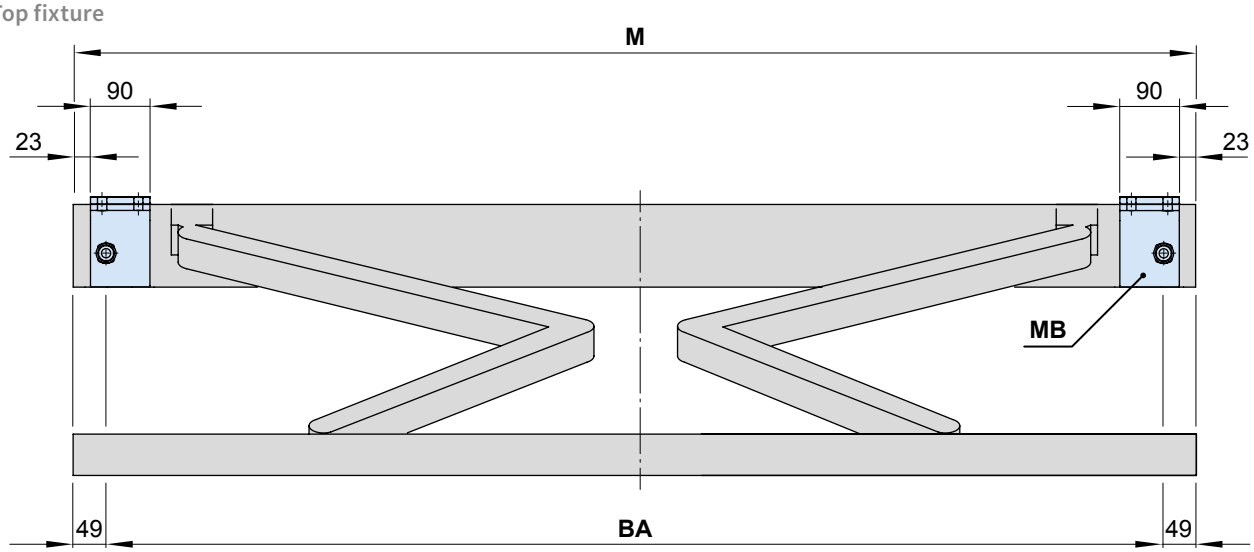

Eaves fixture

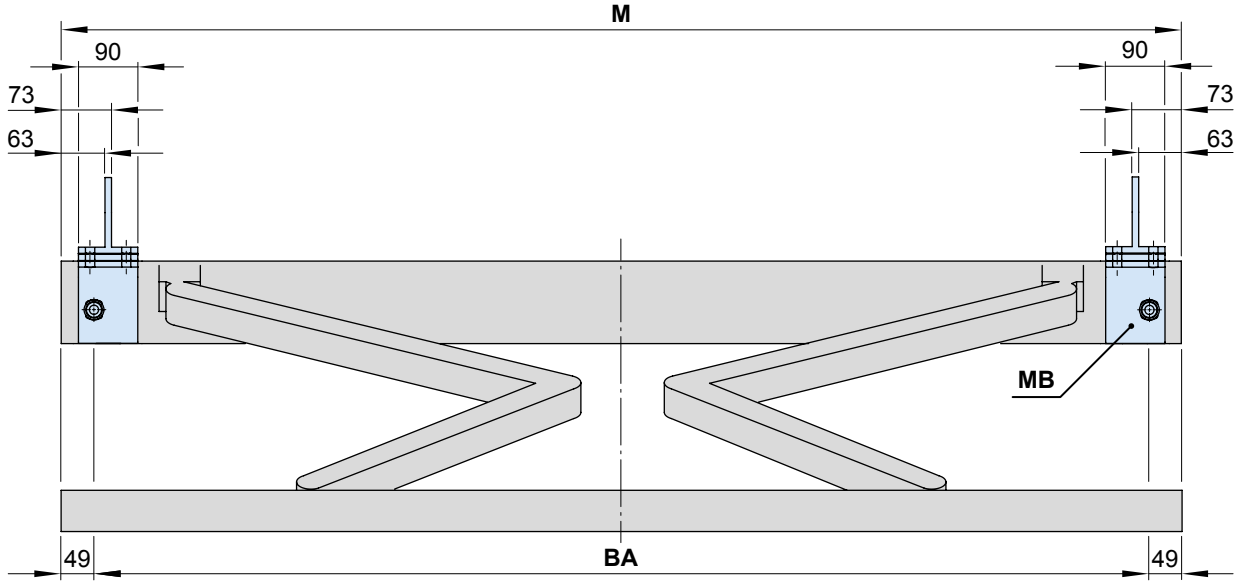

BA = width between fixture points

M = *order dimension* = awning width

MB = bracket fixture range

dimensions in mm

No of brackets | No. of fixing points

		Awning width							
		250	**300**	**350**	**400**	**450**	**500**	**550**	**600**
Order dimensions		195 – 250	251 – 300	301 – 350	351 – 400	401 – 450	451 – 500	501 – 550	551 – 600
	BHT	**No of brackets | No. of fixing points**							
W	**10**	2 | 6							
BP		**A** 2 | 16			**B** 2 | 8		**C** 2 | 12		
PA		2 | 8							
DA / DE	**9**	2 | 8							

dimensions in cm

N.B! If awnings are installed directly next to one another, a minimum distance of 50 mm must be maintained between each awning!!

The **pull-out forces** necessary for determining the correct fixing materials necessary to meet wind resistance class 2 (Beaufort 5) can be found in the password-protected dealer area of the markilux.com website under “Pull-out Forces”.

BHT = bracket width
BP = spreader plate A , B or C, to be positioned behind the folding arm
DA = eaves fixture bracket
DE = top fixture bracket
PA = markilux panel, fixture profile, width 250 mm
W = face fixture bracket

Face fixture

Fixtures, fittings and accessories

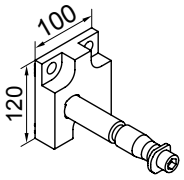

face fixture bracket

left

72826.

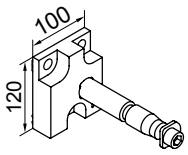

face fixture bracket

right

72827.

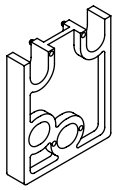

spacer plate for face fixture

100 × 120 × 20 mm

N.B!
Stack to a max. height of 200 mm

718581

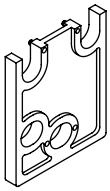

spacer plate for face fixture

718571

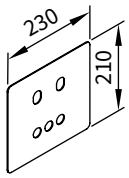

cover plate
for spacer plates
and stand-off brackets
in the case of external
insulation

230 × 210 × 2 mm

71843.

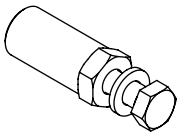

bolt reduction assembly
M 16 → M 12 / SW 27

50 mm

753891

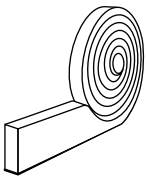

compression tape,
PU soft foam material
to eliminate gaps,
in rolls of 15 m, gap size
from 3 mm to 7 mm, with
a minimum resistance
to water ingression of
600 Pa,
grey

795721

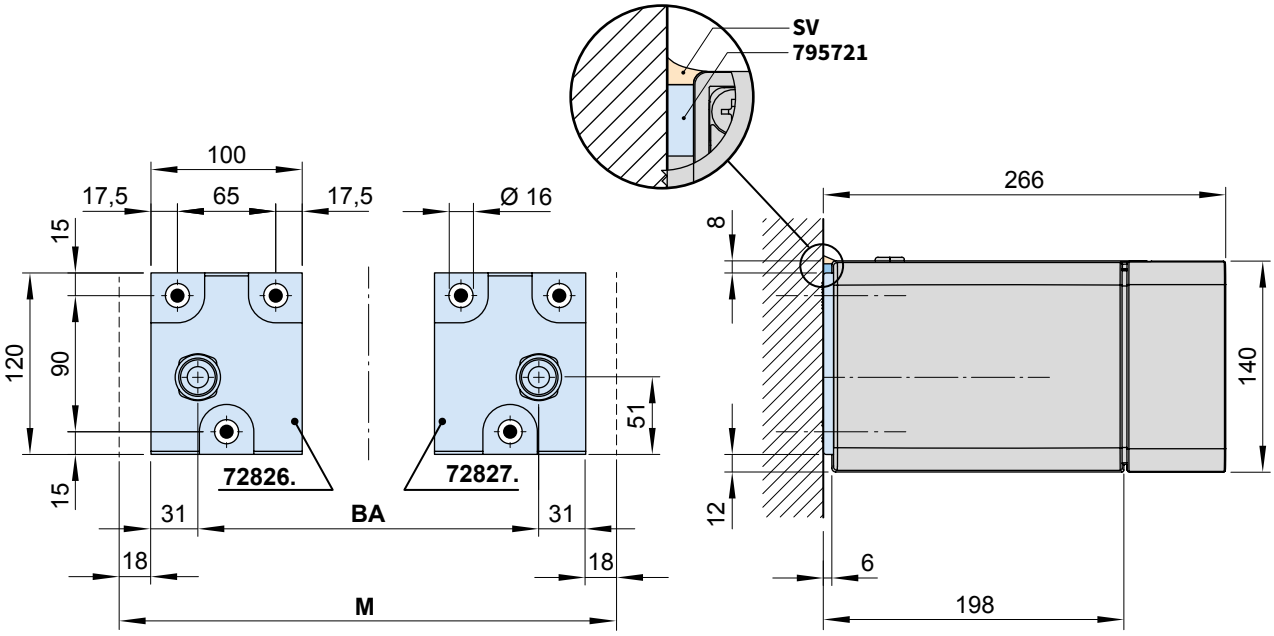

795721 = compression tape (optional)
BA = width between fixture points
M = *order width* = awning width
SV = silicon seal

dimensions in mm

Face fixture with spreader plate A

Fixtures, fittings and accessories

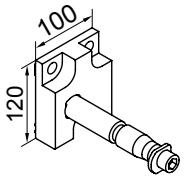

face fixture bracket

left

72826.

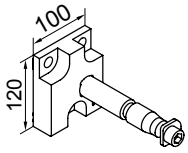

face fixture bracket

right

72827.

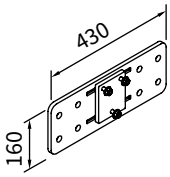

spreader plate A

430 × 160 × 12 mm

72870.

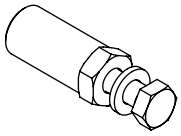

bolt reduction assembly
M 16 → M 12 / SW 27

50 mm

753891

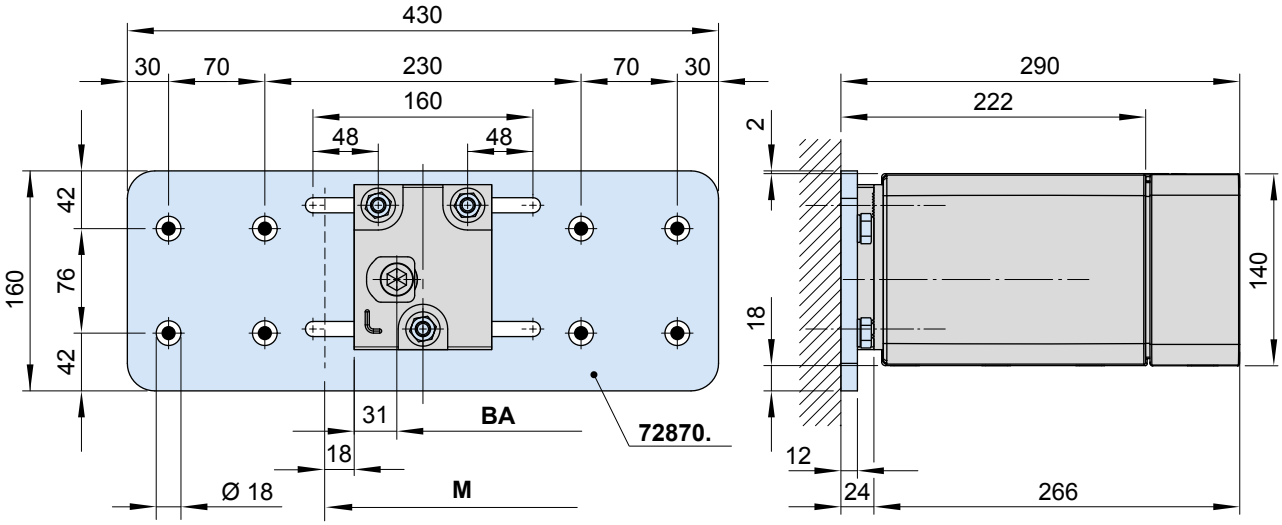

BA = width between fixture points

M = *order width* = awning width

dimensions in mm

Face fixture with spreader plate B

Fixtures, fittings and accessories

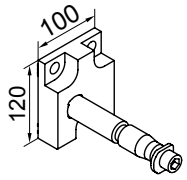

face fixture bracket

left

72826.

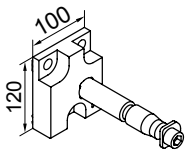

face fixture bracket

right

72827.

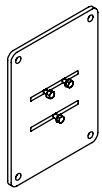

spreader plate B

300 × 400 × 12 mm

75325.

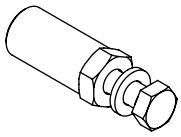

bolt reduction assembly
M 16 → M 12 / SW 27

50 mm

753891

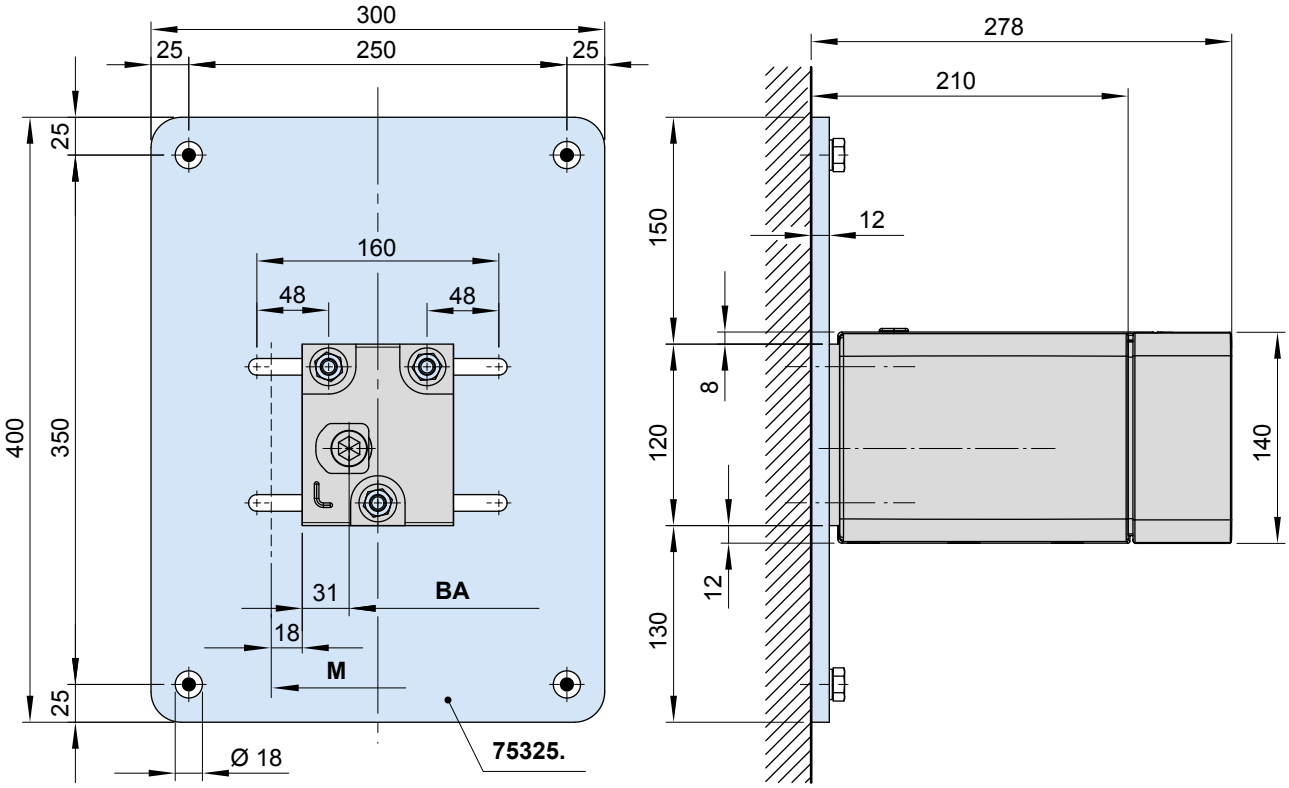

BA = width between fixture points

M = *order width*= awning width

dimensions in mm

Face fixture with spreader plate C

Fixtures, fittings and accessories

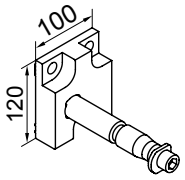

face fixture bracket

left

72826.

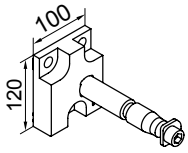

face fixture bracket

right

72827.

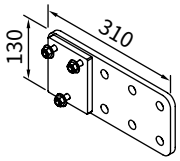

spreader plate C

310 × 130 × 12 mm

72526.

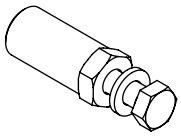

bolt reduction assembly
M 16 → M 12 / SW 27

50 mm

753891

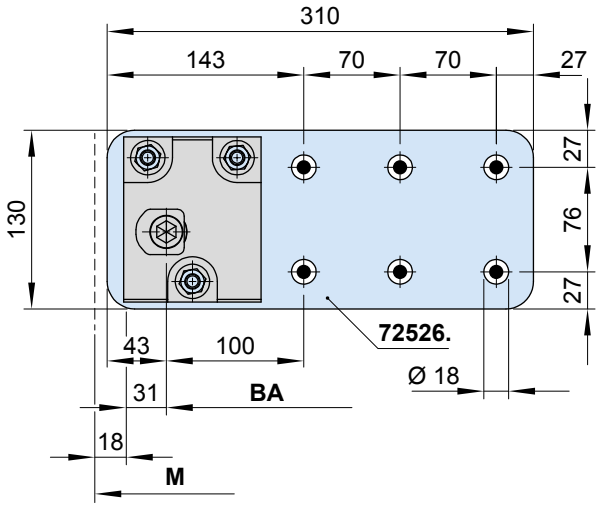

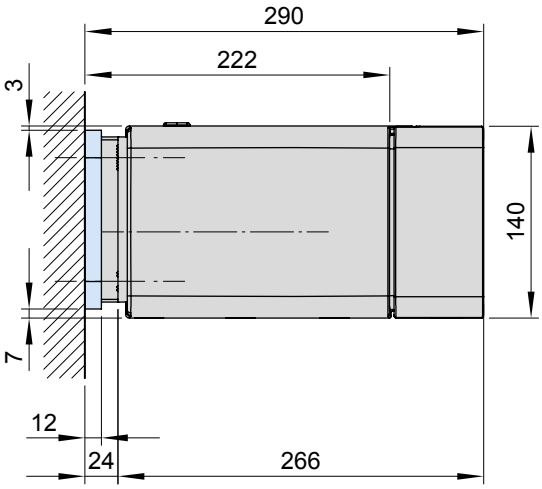

BA = width between fixture points

M = *order width* = awning width

dimensions in mm

Face fixture with markilux panel 250 mm

Fixtures, fittings and accessories

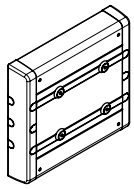

markilux panel 250 mm fixture profile

wide with cover profiles and end caps

250 × 230 × 49 mm

76308.

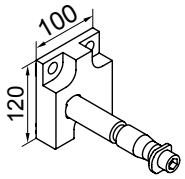

face fixture bracket

left

72826.

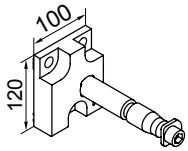

face fixture bracket

right

72827.

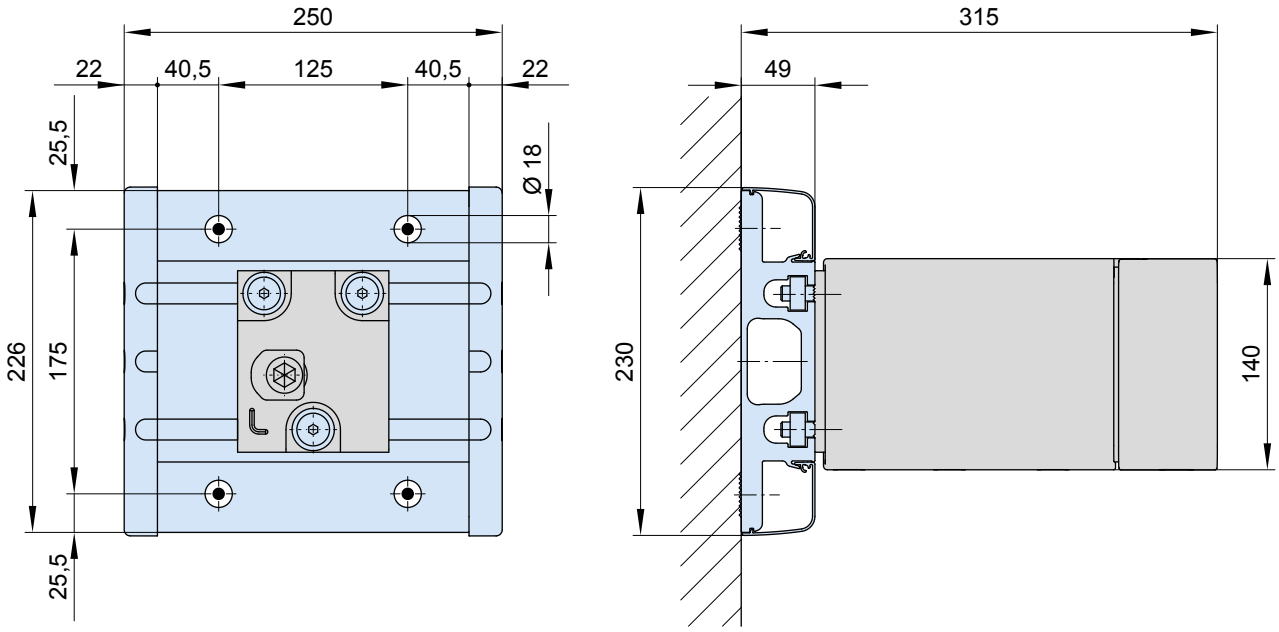

dimensions in mm

Face fixture with markilux panel continuous

Fixtures, fittings and accessories

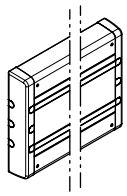

markilux panel 250 mm fixture profile

wide with cover profiles and end caps

continuous

76380.

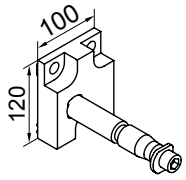

face fixture bracket

left

72826.

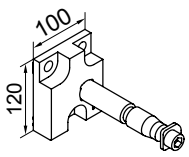

face fixture bracket

right

72827.

As a **continuous fixture profile**, the markilux panel will always be supplied to order on the basis of a technical drawing prepared in the factory in accordance with the awning specification.

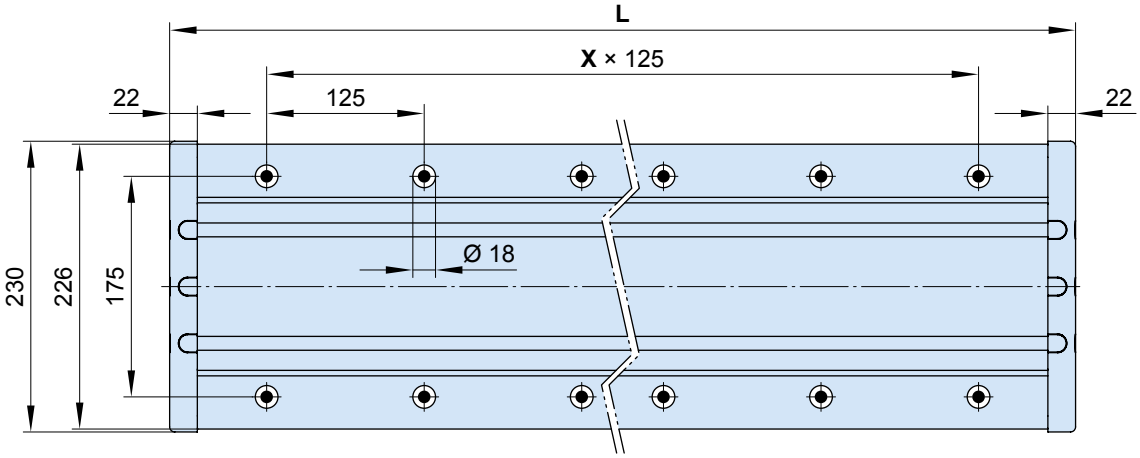

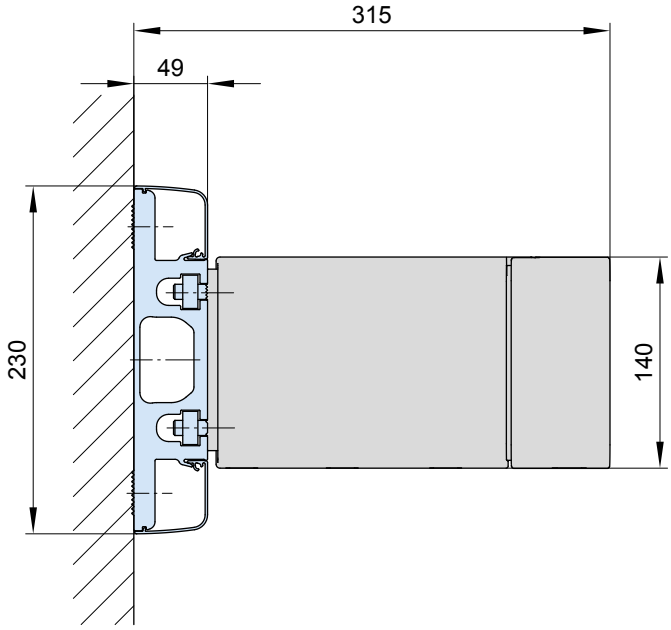

L = individual width, max. 7000 mm **X** = fixing point separation, **by way of example** dimensions in mm

Face fixture with stand-off bracket

Fixtures, fittings and accessories

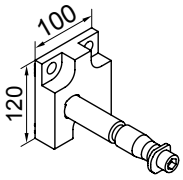

face fixture bracket

left

72826.

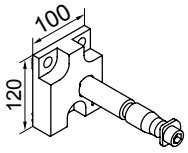

face fixture bracket

right

72827.

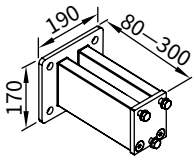

stand-off bracket
for face fixture bracket

72872.

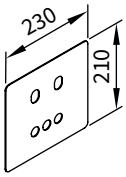

cover plate
for spacer plates
and stand-off brackets
in the case of external
insulation

230 × 210 × 2 mm

71843.

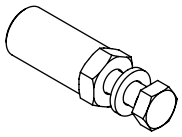

bolt reduction assembly
M 16 → M 12 / SW 27

50 mm

753891

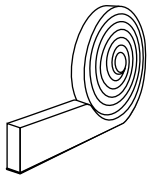

compression tape, PU soft
foam material to eliminate
gaps, in rolls of 15 m, gap
size from 3 mm to 7 mm,
with a minimum resist-
ance to water ingression
of 600 Pa, grey

795721

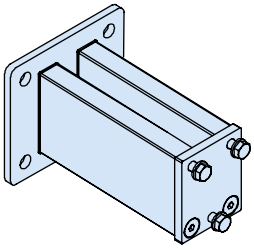

The aluminium stand-off bracket can be shortened on location from 300 mm down to 80 mm. But, then the M 12 thread must be retapped in the shortened profiles.

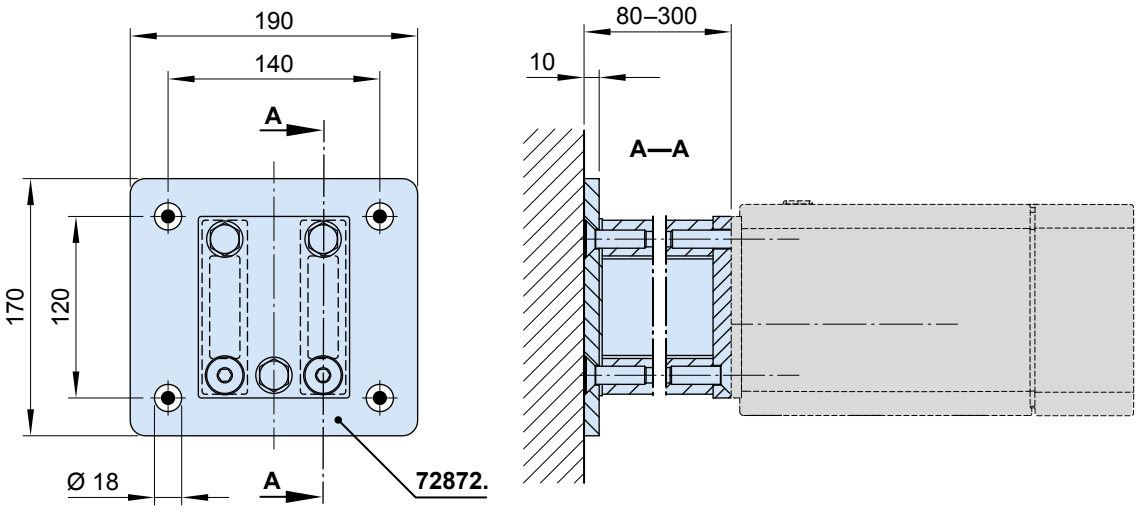

dimensions in mm

Top fixture

Fixtures, fittings and accessories

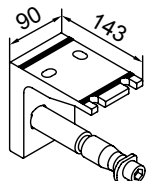

top fixture bracket

left

72860.

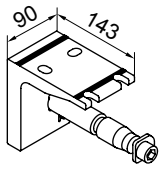

top fixture bracket

right

72861.

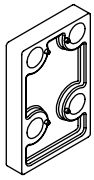

spacer plate for top fixture

90 × 140 × 20 mm

N.B!
Stack to a max. height of 200 mm

716311

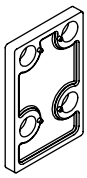

spacer plate for top fixture

90 × 140 × 12 mm

716411

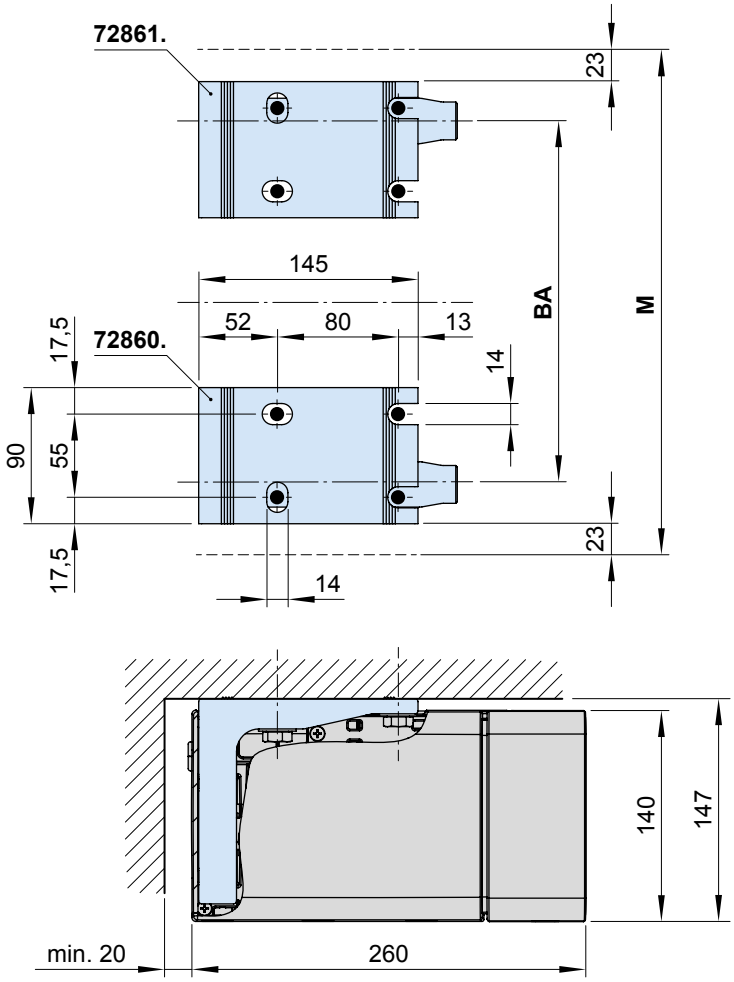

BA = width between fixture points

M = *order width* = awning width

dimensions in mm

Eaves fixture

Fixtures, fittings and accessories

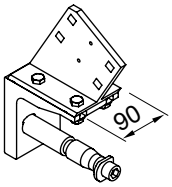

eaves fixture bracket

height of the top plate 150 mm

left

72874.

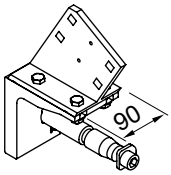

eaves fixture bracket

height of the top plate 150 mm

right

72875.

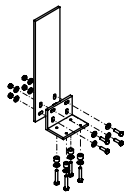

top flat plate and angled bracket for eaves fixture machine finish

716620

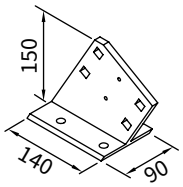

eaves fixture bracket

height of the top plate 150 mm

71612.

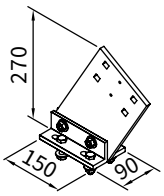

eaves fixture bracket

height of the top plate 270 mm

71659.

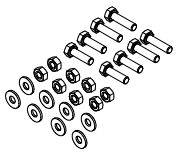

accessories for two eaves fixture brackets 71612.

799601

With eaves fixture bracket, top plate 150 mm (71612.)

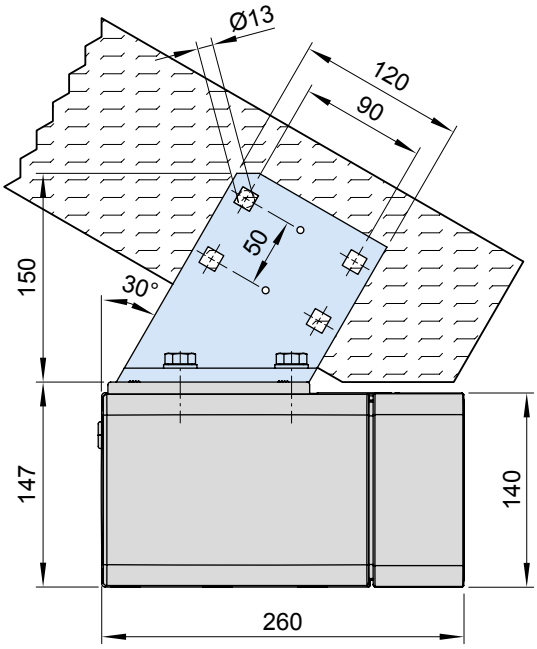

With eaves fixture bracket, top plate 270 mm (71659.)

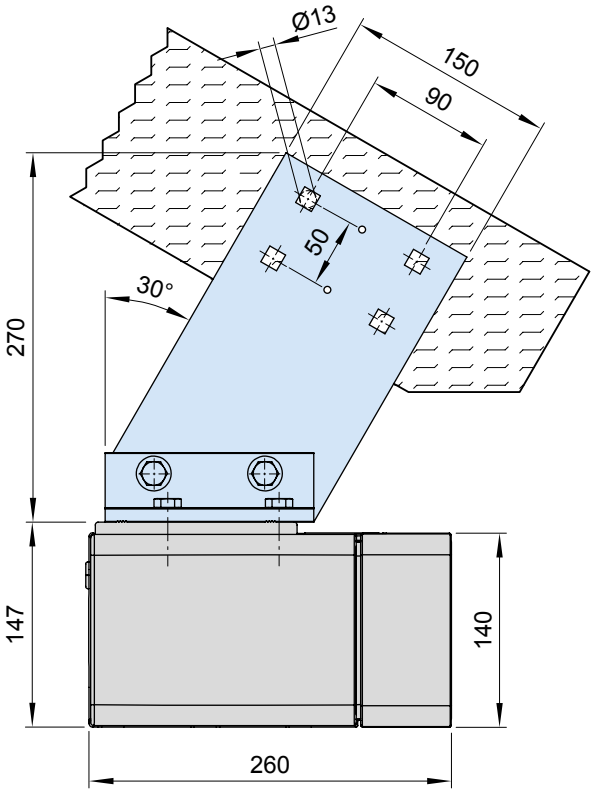

dimensions in mm

Eaves fixture with additional plate

Fixtures, fittings and accessories

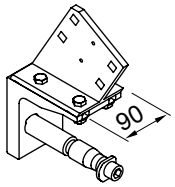

eaves fixture bracket

height of the top plate 150 mm

left

72874.

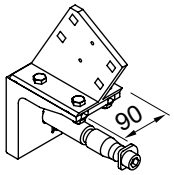

eaves fixture bracket

height of the top plate 150 mm

right

72875.

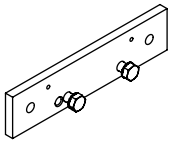

supplementary flat plate eaves fixture

260 × 60 × 12 mm

75383.

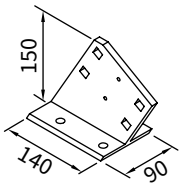

eaves fixture bracket

height of the top plate 150 mm

71612.

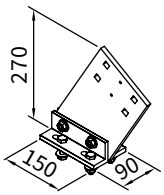

eaves fixture bracket

height of the top plate 270 mm

71659.

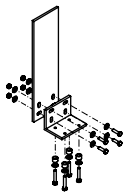

top flat plate and angled bracket for eaves fixture machine finish

716620

accessories for two eaves fixture brackets 71612.

799601

With eaves fixture bracket, top plate 150 mm (71612.)

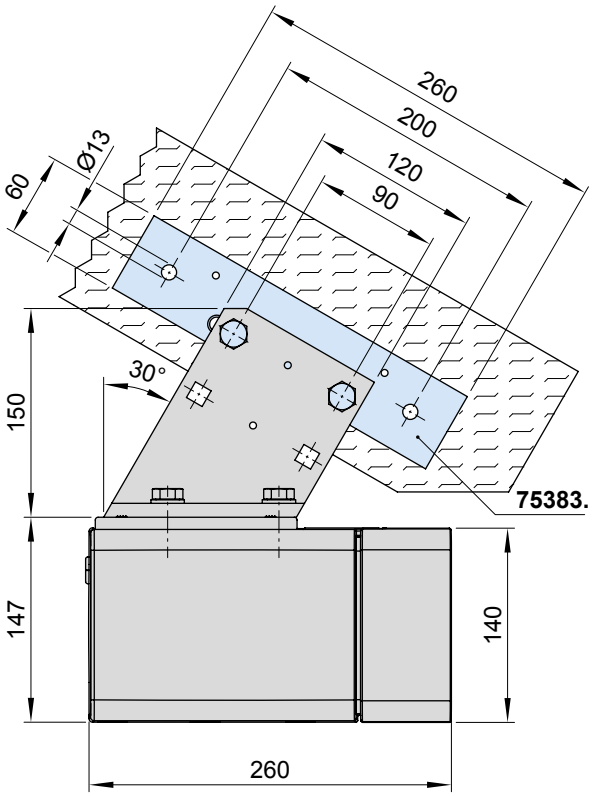

With eaves fixture bracket, top plate 270 mm (71659.)

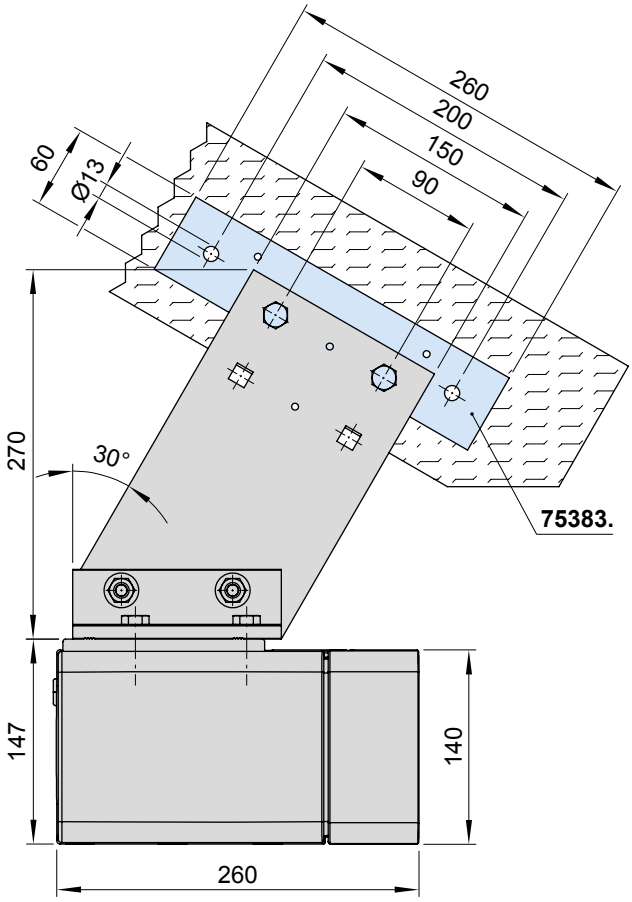

dimensions in mm

01
02
03
04
05

Awning with shadeplus

Face fixture (with manual shadeplus / drop valance)

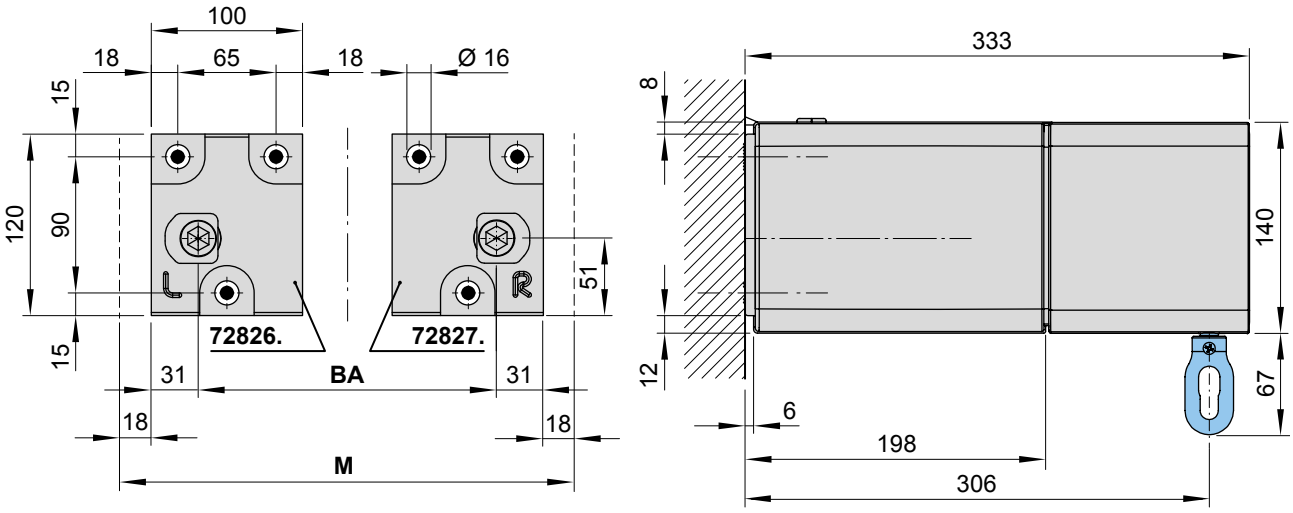

Top fixture (with manual shadeplus / drop valance)

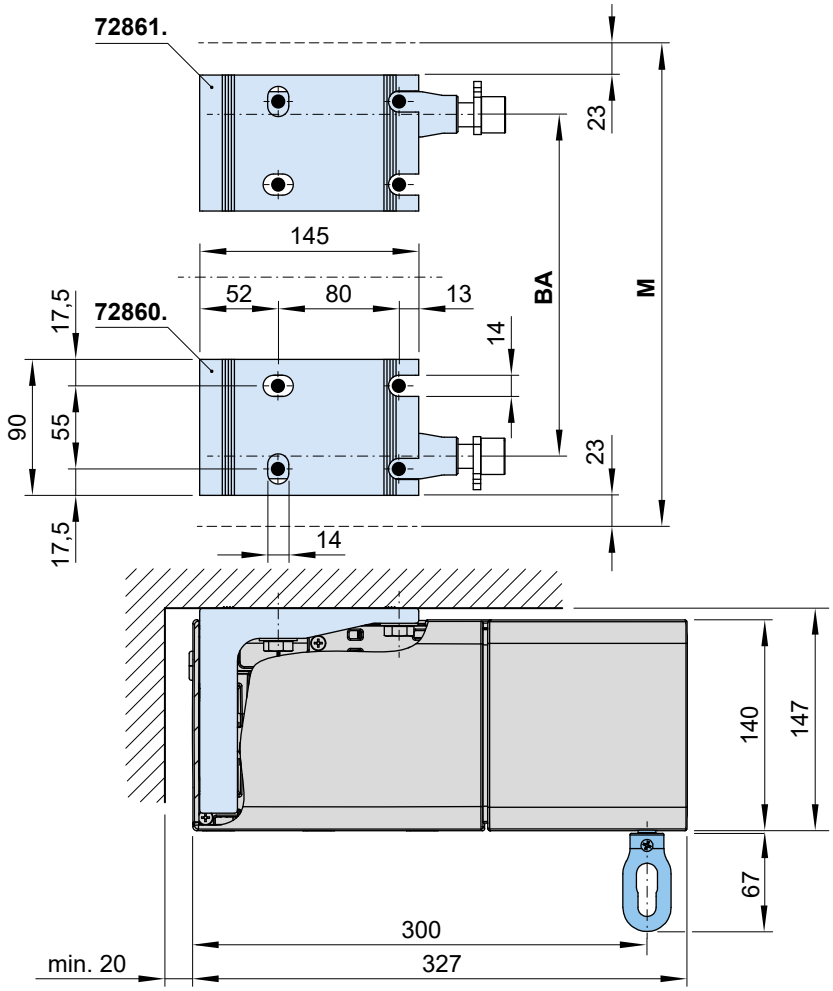

N.B! A shadeplus is not suitable for installation in niches or reveals if top or eaves fixture is used.

72826. = face fixture bracket, left
72827. = face fixture bracket, right
72860. = left top fixture brackets
72861. = top fixture bracket, right
BA = width between fixture points
M = *order dimension* = awning width

dimensions in mm

Reveal fixture

Motor drive

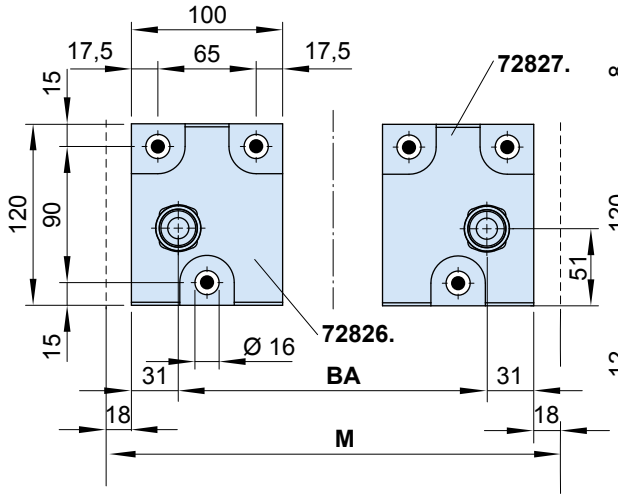

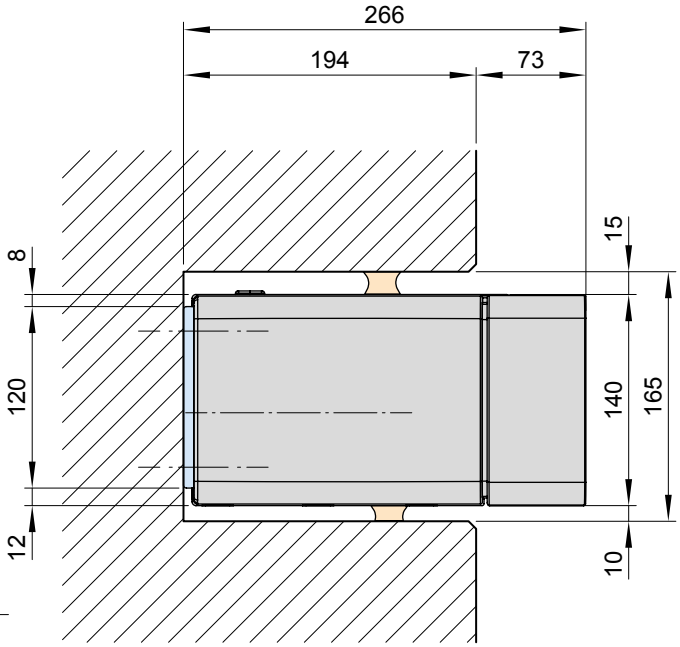

Installation flush with the fascia, without shadeplus

Installation flush with the fascia, with shadeplus

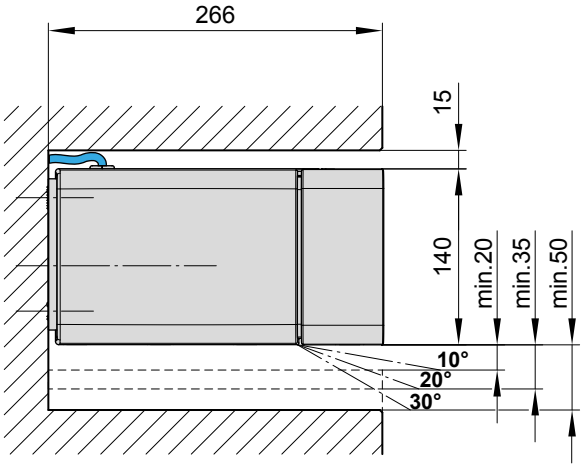

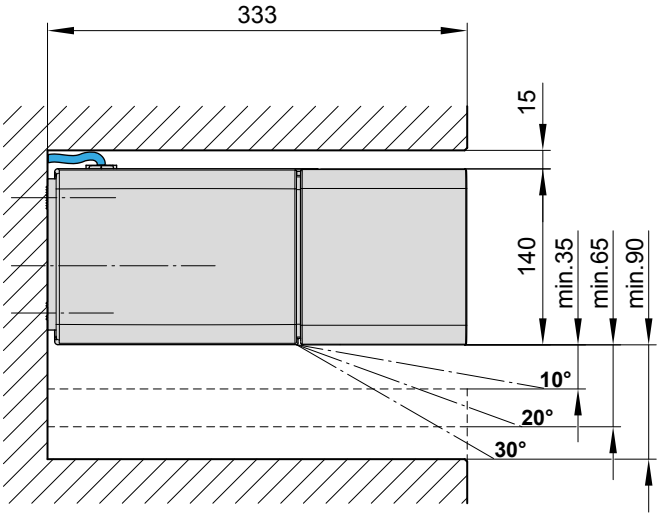

72826. = face fixture bracket, left

72827. = face fixture bracket, right

BA = width between fixture points

M = *order dimension* = awning width

dimensions in mm

Face fixture, manual operation [1)]

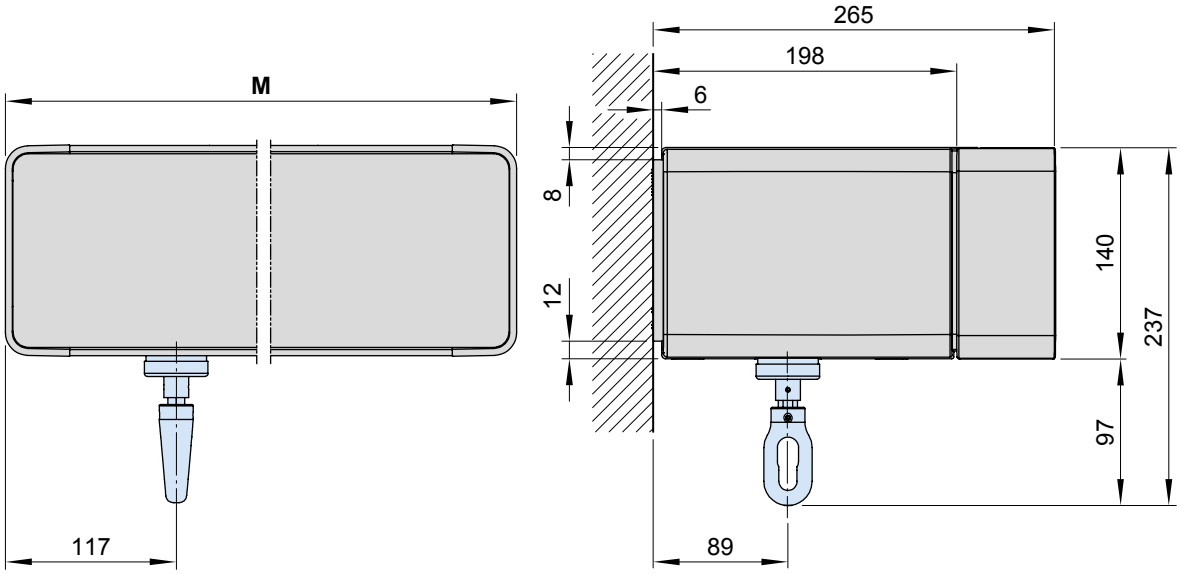

N.B! A shadeplus is not suitable for installation in niches or reveals if top or eaves fixture is used.

1) = depending on the operation side, right or left

M = *order dimension* = awning width

dimensions in mm

Motor cable exit point [1)]

Face fixture

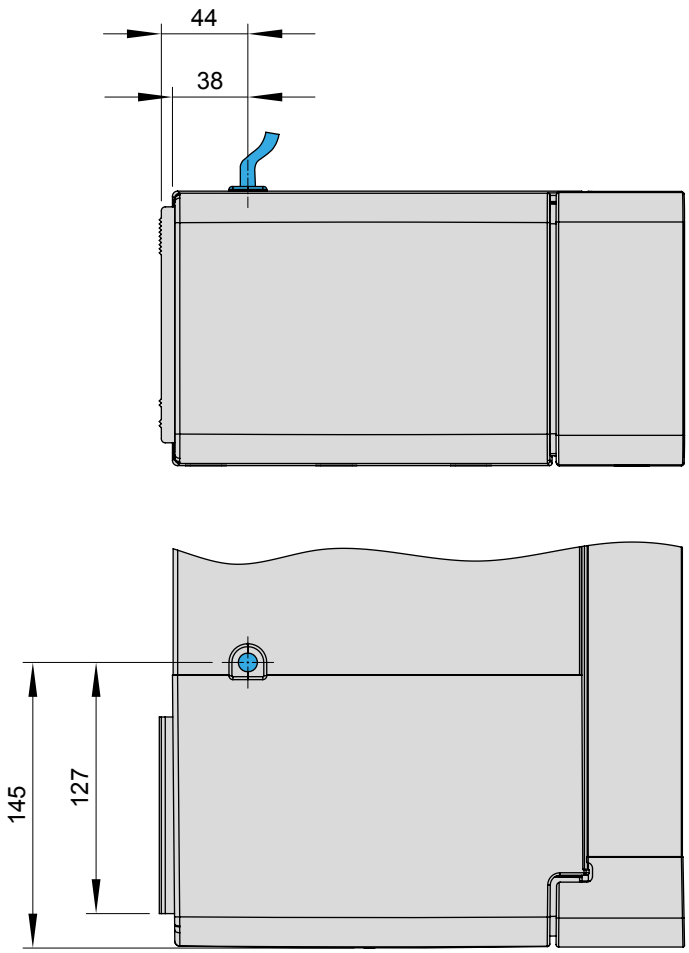

Top fixture

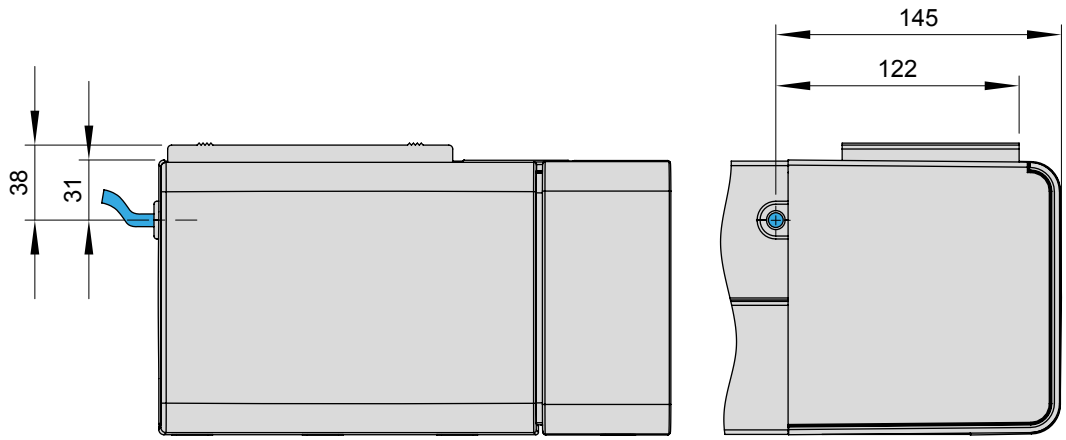

specification	number of cables	max.
awning with integrated radio-controlled technology		**2**
awning motor and / or shadeplus motor	1	
lighting	1	
awning without radio-controlled technology		**3**
awning motor	1	
shadeplus motor	1	
lighting	1	

1) depending on the operation side, right or left

dimensions in mm