Open style folding-arm awning

markilux 930

The designer awning with unique pitch adjustment mechanism.

reddot design award
honourable mention 2009

markilux.com

markilux
safe timeless beautiful

Product characteristics

Wind resistance class 2
Beaufort 5 → 7.5–10.4 m/s → 28–37 km/h → 17–23 mph

1 face fixture

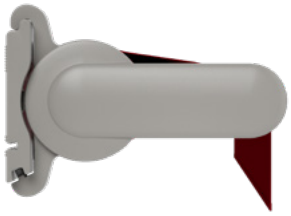

1 top fixture

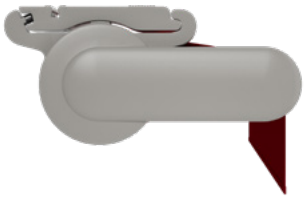

2 manual gearbox operation

1 top fixture
view from the rear

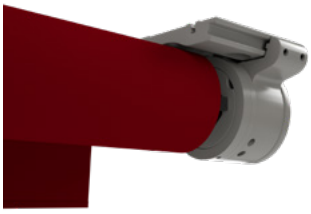

during extension, pitch at 45°

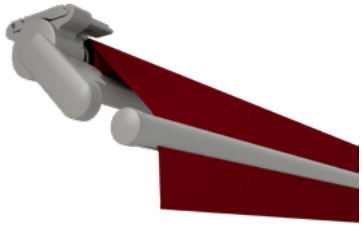

during extension, maximum pitch of 80° (motor operation [1])

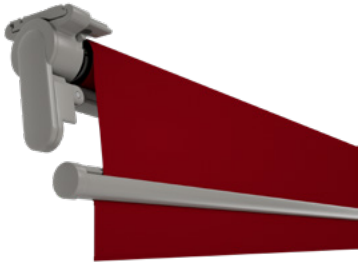

3 pitch adjustment range from 5°–80° (motor operation [1])

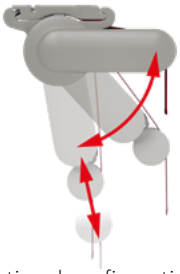

4 twin steel-link chain
corrosion protected

1) optional configuration

Product characteristics

01
02
03
04
05
06
07
08
09
10
11
12
13
14
15
16
17

Description

- finely finished, open style awning with excellent design characteristics. Ideally suited to top fixture or installation under overhanging roofs, balconies etc..

Special features

- self-supporting cassette profile construction, the brackets being installed at each end of the awning – also suitable for bridging larger distances
- the compact awning height and the tilt mechanism (patent applied for), which means that the awning invariably closes horizontally, makes the awning look very slender
- tidy appearance because the awning closes in a horizontal position regardless of the pre-set pitch
- with a maximum pitch of 80° the awning can be set at a very steep angle

Dimensions

- awning in the standard version: depth 286 mm, height 122 mm
- single unit: minimum width 178 cm at the smallest projection of 150 cm, maximum width 500 cm at the largest projection of 300 cm

Roller tube and lateral bearings

- round roller tube Ø 85 mm with keyway, galvanised steel – excellent stability, ensures near perfect cover performance even at the largest widths
- the arm bearer is made of die-cast aluminium, powder coated, with integrated, infinitely variable pitch setting mechanism

Awning profiles

- extruded aluminium, in façade quality, powder coated
- circular front profile with integrated valance keyway

Folding arms

- profiles in extruded aluminium, in façade quality, powder coated
- moving parts made of drop-forged aluminium – the arms are therefore extremely fracture resistant
- pivot bolts stainless steel, running in teflon-coated bronze bushes – practically maintenance free, virtually silent and hard-wearing
- power transference via corrosion-protected twin steel-link chains at the elbow joint

Side caps

- the front profile end caps are made of high-quality plastic, powder coated

Fixture brackets

- face fixture, top fixture
- extruded aluminium, powder coated
- also available in individual widths (on request)
- pitch range 5°–80° (motor) or 5°–25° (gearbox operation), 26°–55° (gearbox operation, from the rear)
- spacer plates, stand-off brackets and other accessories are available

Frame and end cap colours

markilux frame colours without surcharge

traffic white RAL 9016

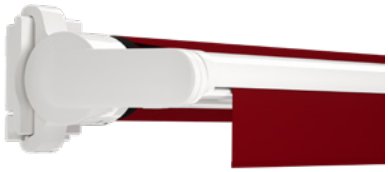

metallic aluminium RAL 9006

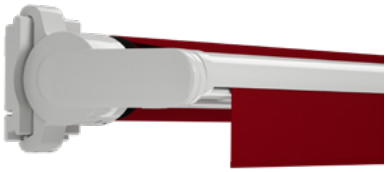

grey brown, similar to RAL 8019

off-white textured finish, 5233 [1)]

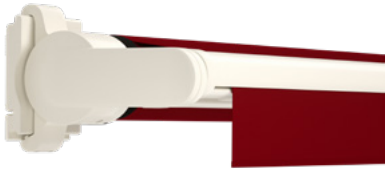

stone grey metallic, 5215 [1)]

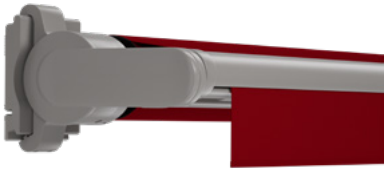

anthracite metallic, 5204 [1)]

Havana brown textured finish, 5229 [1)]

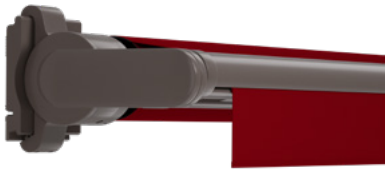

Non-standard powder-coated finish

Bespoke frame colours at a surcharge – matt, metallic and pearl finishes as well as other colour ranges (DB, Tiger etc.) on request. All frame colours are available at a surcharge with enhanced corrosion protection.

1) textured finish

Colours may differ slightly from those depicted in both hue and finish.

Dimensions and configuration options

Single unit

		Overall awning width						Minimum width	
		250	300	350	400	450	500	Motor	Crank handle
Order dimensions		178 – 250	251 – 300	301 – 350	351 – 400	401 – 450	451 – 500		
H	150	1)						178	178
	200	1)						228	228
	250	—	1)					278	278
	300	—	—	1)				328	328

dimensions in cm

1) = please note the minimum widths!
H = projection

= 2 standard arms, 2 fixture brackets

Operation	standard	optional
crank handle	✓	—
spring-assisted crank handle	—	✓
hard-wired motor	—	✓
silentec motor (optionally with an external io / RTS receiver)	—	—
radio-controlled motor io, 868 MHz [1]	—	✓
radio-controlled motor RTS, 433 MHz [1]	—	✓
radio-controlled motor RTS, 433 MHz with manual override	—	—

1) standard motor with external receiver

Coupled Awning

not available

Awning cover	fabric range no.	standard	optional
sunvas	301.. / 309..–315..	✓	—
perla	370 ..	—	✓
sunsilk	324.. / 325.. / 328.. / 369..	✓	—
perla FR	374.. / 375..	—	✓
perfotex	331.. / 332..	—	—
transolair	338..	—	—
vuscreen Alu	317..	—	—
Soltis Perform 92	92-20..	—	—
glass fibre screen	272..	—	—
valance, height 10 cm		✓	—

Shadeplus / drop valance

not available

Optional accessories

infrared heater 2500 W
infrared heater 2500 W with integrated radio-controlled receiver 868 MHz io
LED spotline – light bar 110 × 70 mm with 5 W LED spotlights, width 180 cm / 3 spots or 300 cm / 5 spots
LED Spotline io – light bar 110 × 70 mm with 5 W LED spotlights with integrated dimmable radio-controlled receiver. 180 cm / 3 spots or 300 cm / 5 spots
automatic controls (light, wind, rain)

N.B! Important background information can be found in the chapter “Optional Accessories”.

Fixture brackets

face fixture bracket 150 mm	71624.
face fixture bracket 300 mm L	70617.
face fixture bracket 300 mm R	70600.
spreader plate A 430 × 160 × 12 mm	75326.
spreader plate B 300 × 400 × 12 mm	75325.
markilux panel 250 × 230 × 49 mm	76308.
markilux panel continuous	76380.
stand-off bracket 80–300 mm	77968.
top fixture bracket 150 mm	71624.
top fixture bracket 300 mm L	70617.
top fixture bracket 300 mm R	70600.

Bracket fixture range

Awning with 2 folding arms

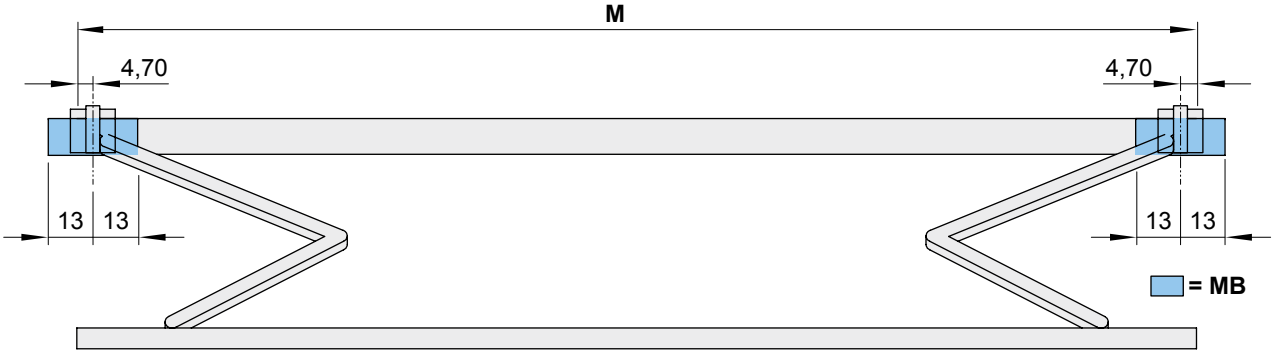

dimensions in cm

Face fixture

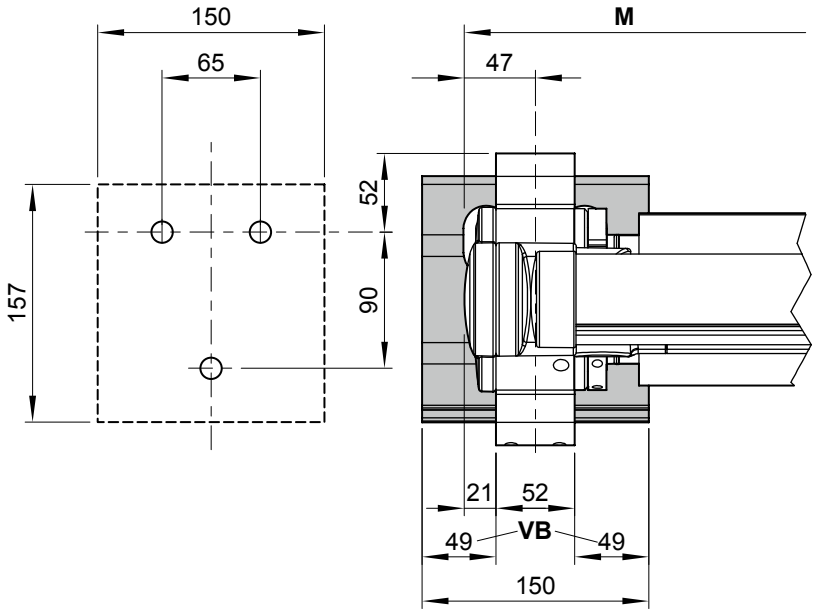

dimensions in mm

		Overall awning width					
		250	**300**	**350**	**400**	**450**	**500**
Order dimensions		180 – 250	251 – 300	301 – 350	351 – 400	401 – 450	451 – 500
	BHT	**No. of brackets | No. of fixing points**					
W	**15**	2 | 6					
BP		**A** 2 | 16 **B** 2 | 8					
PA		2 | 8					
DE	**15**	2 | 6					

If the brackets cannot be positioned in accordance with this table, make sure the actual measurements are noted on the order form!

The **pull-out forces** necessary for determining the correct fixing materials necessary to meet wind resistance class 2 (Beaufort 5) can be found in the password-protected dealer area of the markilux.com website under „Pull-out Forces“.

BHT = bracket width
BP = spreader plate (A / B)
DE = top fixture bracket
H = *order dimension* = projection
M = *order dimension* = awning width
MB = bracket fixture range
VB = adjustment range face fixture bracket
PA = markilux panel, fixture profile, width 250 mm
W = face fixture bracket

dimensions in cm

Face fixture

Fixtures, fittings and accessories

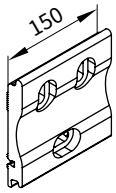

face fixture bracket

150 mm

71624.

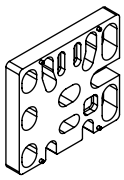

spacer plate for face fixture
150 × 136 × 20 mm

Attention!
stack to a max. height of 200 mm

716331

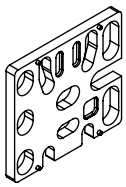

spacer plate for face fixture

150 × 136 × 12 mm

71644.

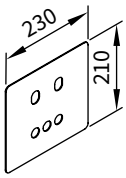

cover plate
for spacer plate
and stand-off brackets
in the case of external insulation

230 × 210 × 2 mm

71843.

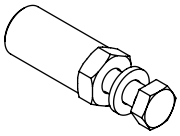

bolt reduction assembly

pack 10 pcs

M 16 → M 12 | M 16 → M 10 | M 12 → M 10 | M 10 → M 10

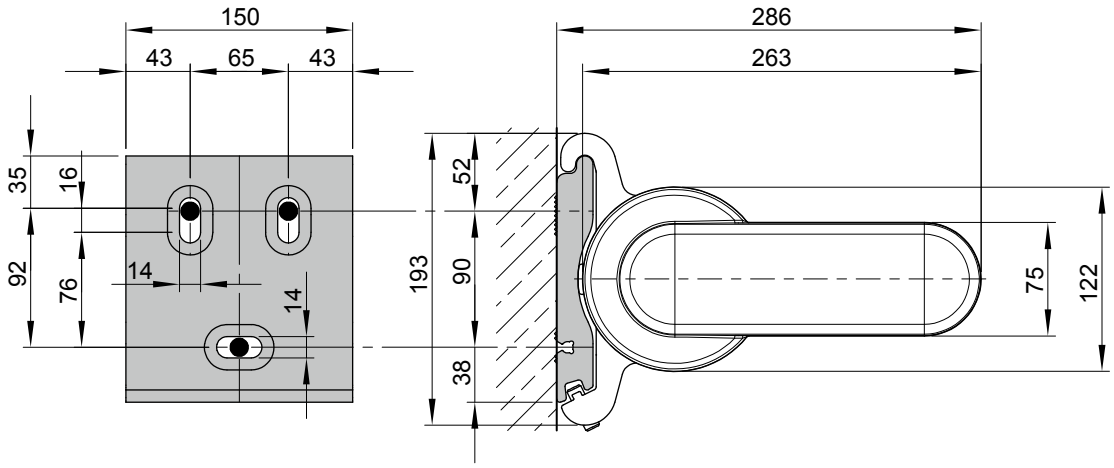

dimensions in mm

Face fixture with spreader plate A

Fixtures, fittings and accessories

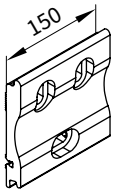

face fixture bracket

150 mm

71624.

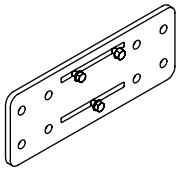

spreader plate A

430 × 160 × 12 mm

75326.

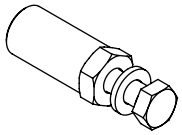

bolt reduction assembly

pack 10 pcs

M 16 → M 12	M 16 → M 10	M 12 → M 10	M 10 → M 10

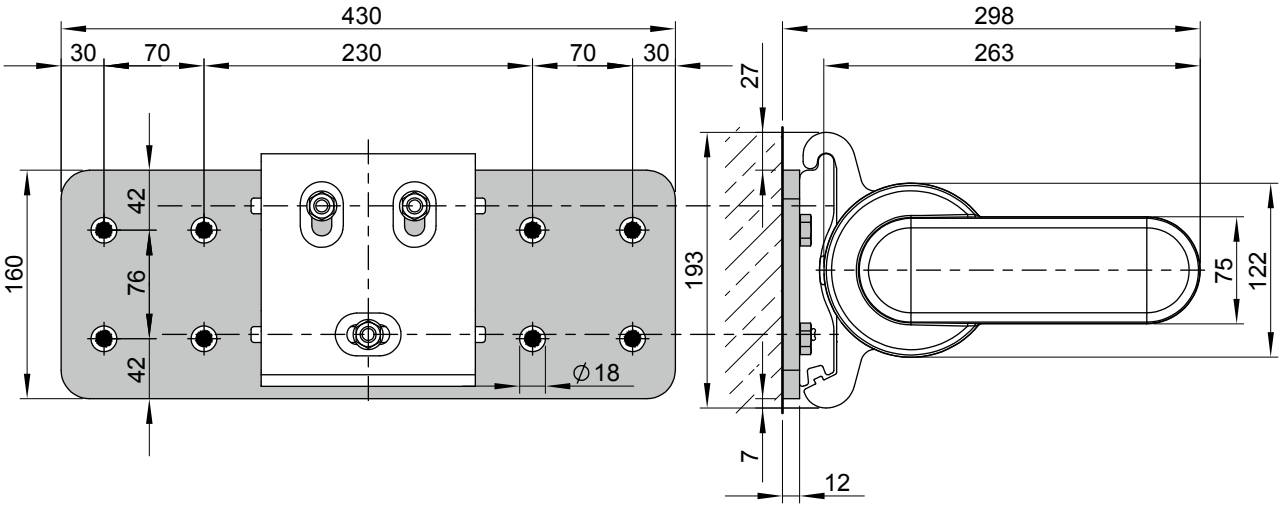

dimensions in mm

Face fixture with spreader plate B

Fixtures, fittings and accessories

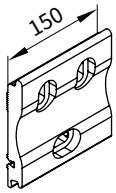

face fixture bracket

150 mm

71624.

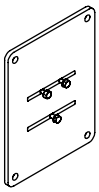

spreader plate B

300 × 400 × 12 mm

75325.

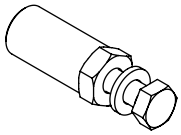

bolt reduction assembly

pack 10 pcs

M 16 → M 12 | M 16 → M 10 | M 12 → M 10 | M 10 → M 10

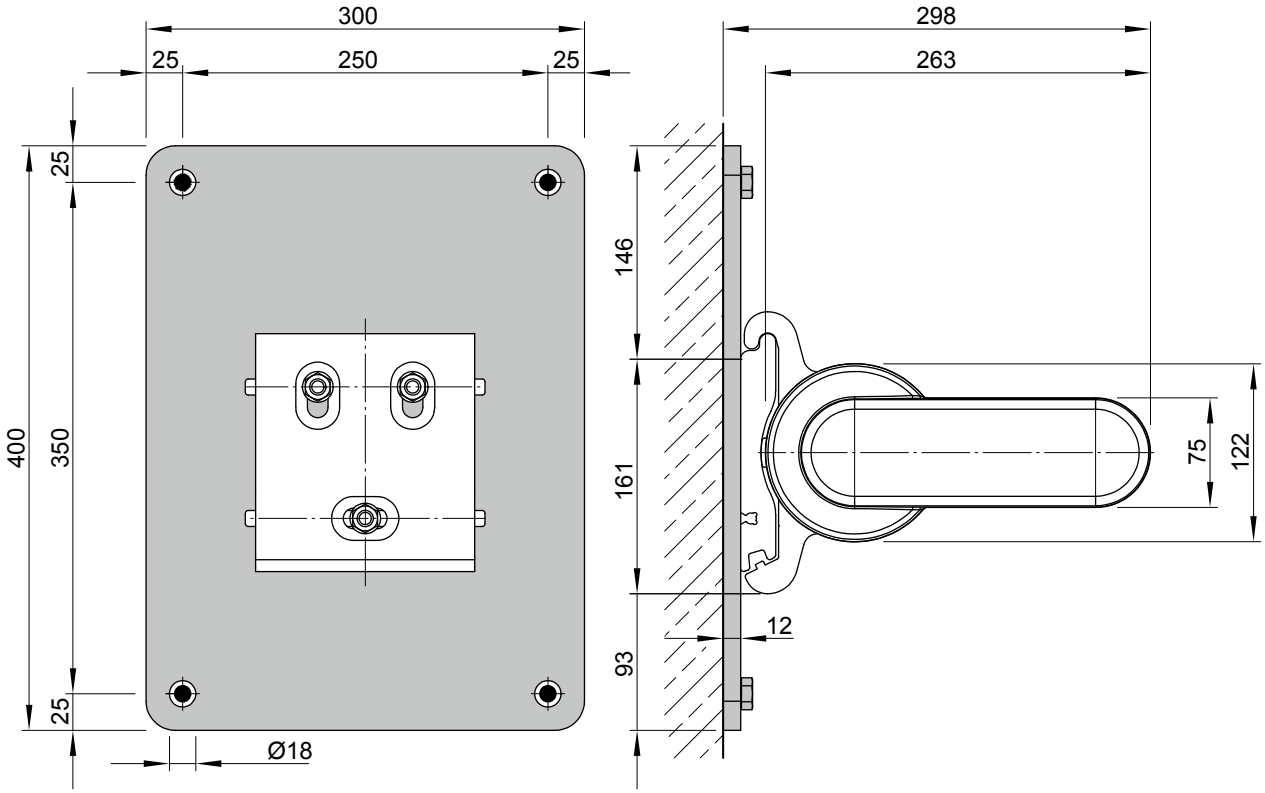

dimensions in mm

Face fixture with markilux panel 250 mm

Fixtures, fittings and accessories

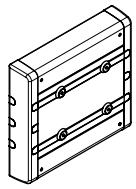

markilux panel fixture profile,

wide with cover profiles and end caps

250 × 230 × 49 mm

76308.

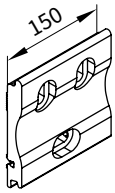

face fixture bracket

150 mm

71624.

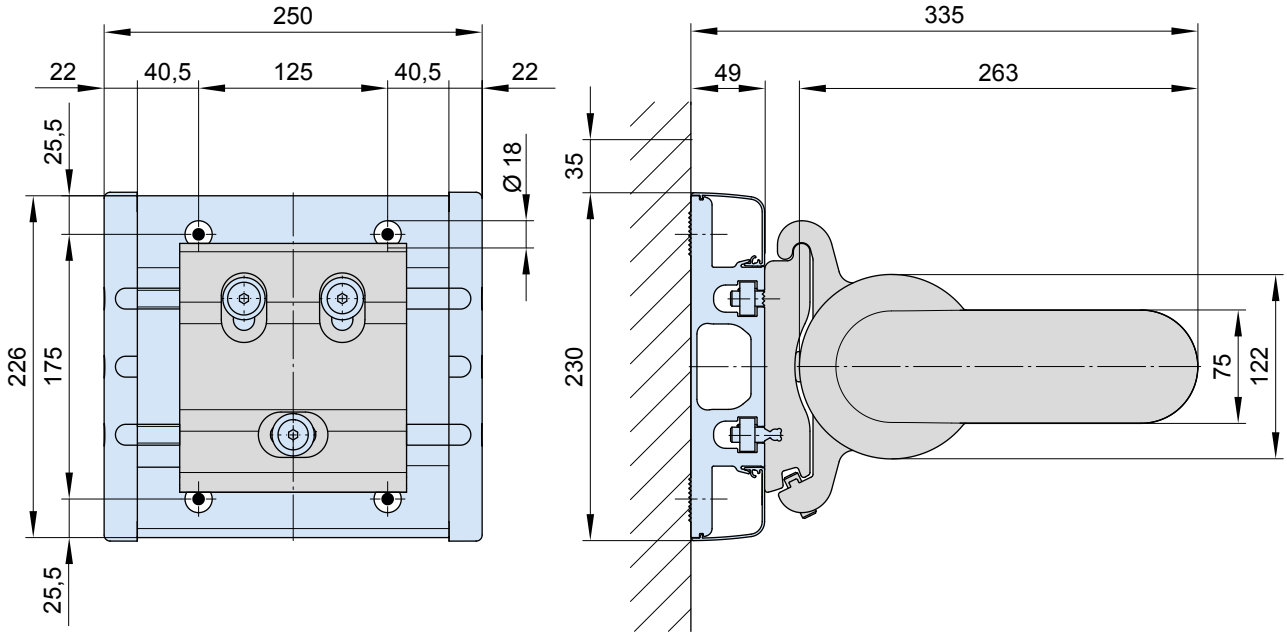

Face fixture with markilux panel continuous

Fixtures, fittings and accessories

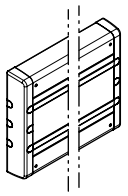

markilux panel fixture profile,

wide with cover profiles and end caps

continuous

76380.

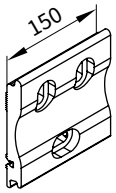

face fixture bracket

150 mm

71624.

As a **continuous fixture profile**, the markilux panel will always be supplied to order on the basis of a technical drawing prepared in the factory in accordance with the awning specification.

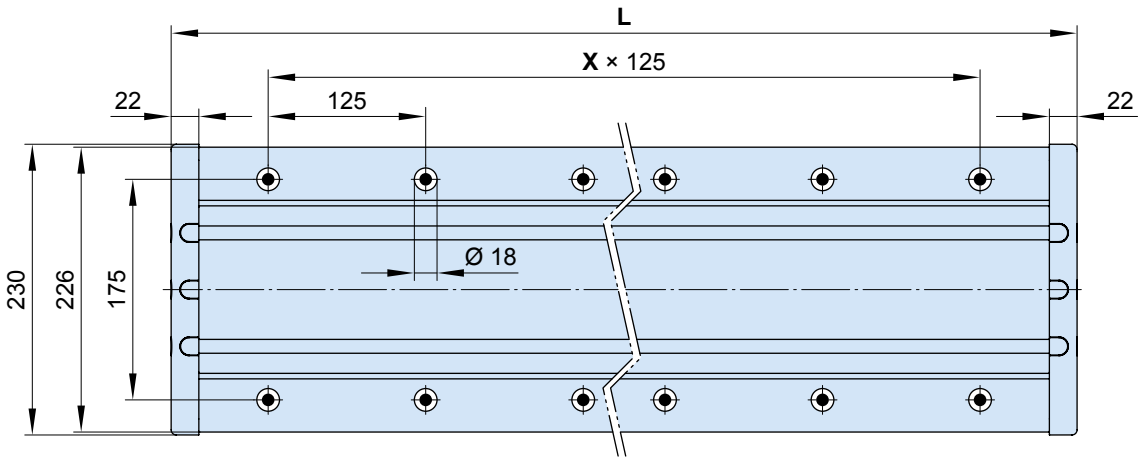

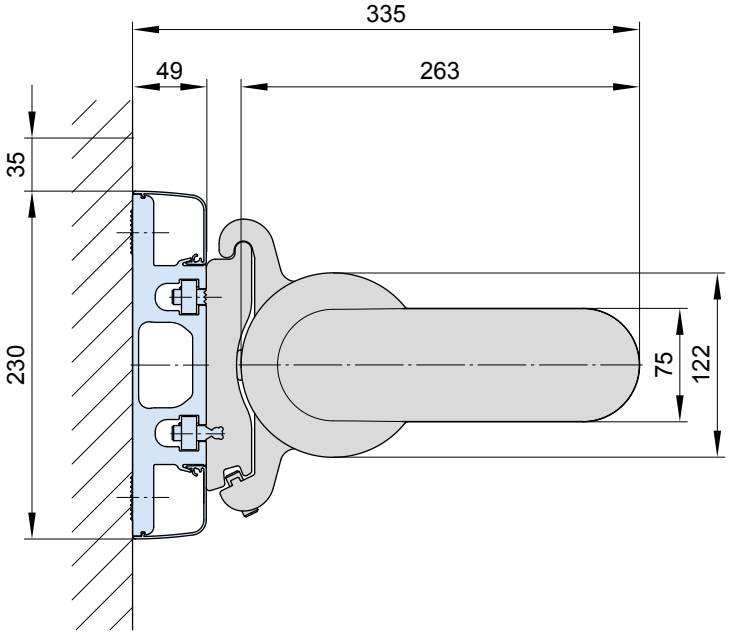

L = individual width, max. 7000 mm

X = fixing point separation, **by way of example**

Face fixture with stand-off bracket

Fixtures, fittings and accessories

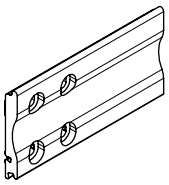

face fixture bracket left

300 mm

70617.

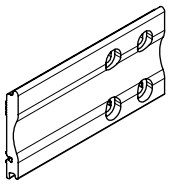

face fixture bracket right

300 mm

70600.

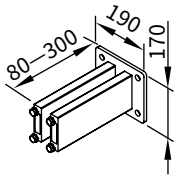

stand-off bracket
for face-fixture bracket
70617. and 70600.

77968.

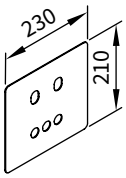

cover plate
for spacer plate
and stand-off brackets
in the case of external
insulation

230 × 210 × 2 mm

71843.

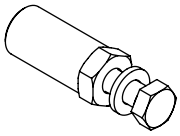

bolt reduction assembly

pack 10 pcs

M 16 → M 12	M 16 → M 10	M 12 → M 10	M 10 → M 10

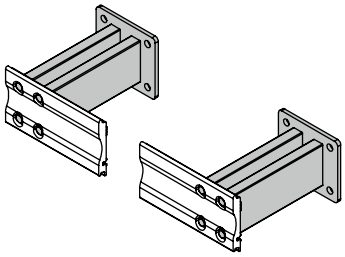

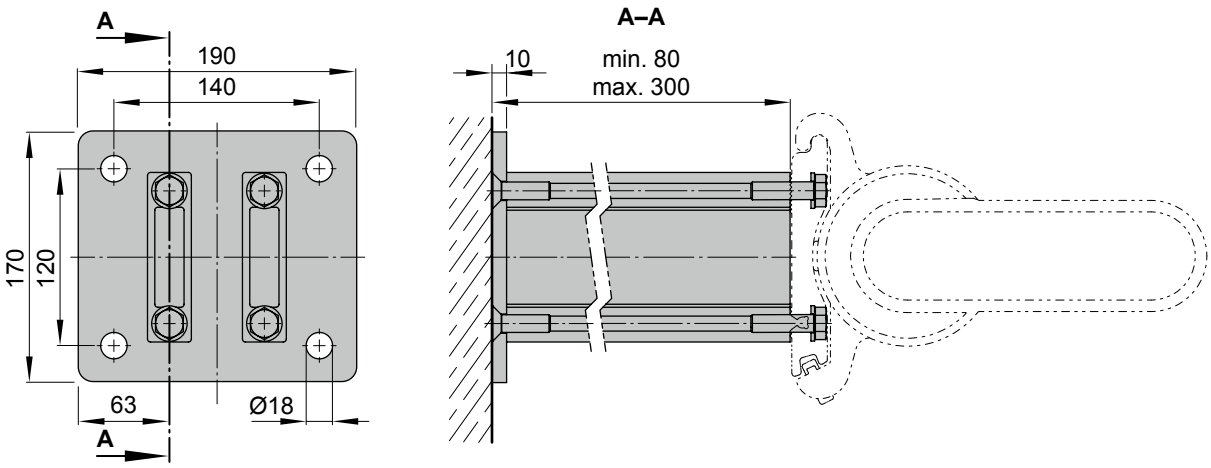

dimensions in mm

Top fixture

Fixtures, fittings and accessories

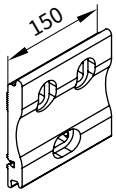

face fixture bracket

150 mm

71624.

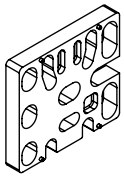

spacer plate for top fixture

150 × 136 × 20 mm

Attention!
stack to a max. height of 200 mm

716331

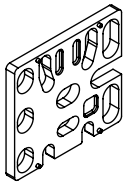

spacer plate for top fixture

150 × 136 × 12 mm

71644.

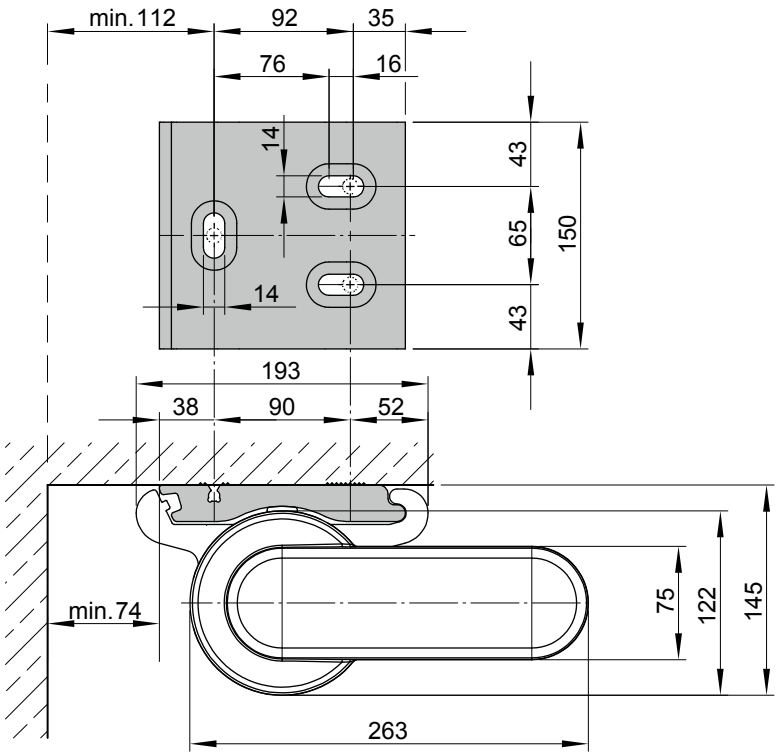

dimensions in mm

Face fixture, manual gearbox operation, pitch 5°–25°

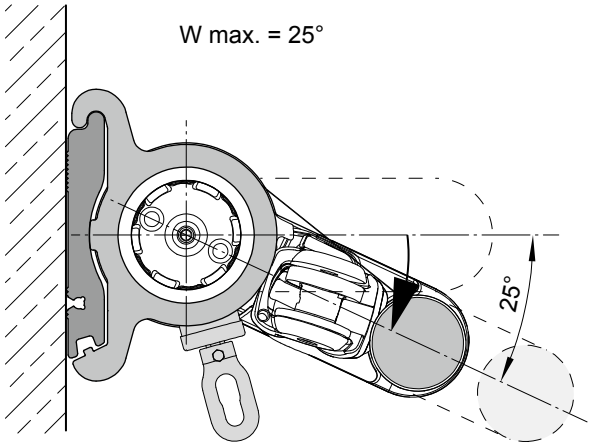

Top fixture, manual gearbox operation, pitch 5°–25°

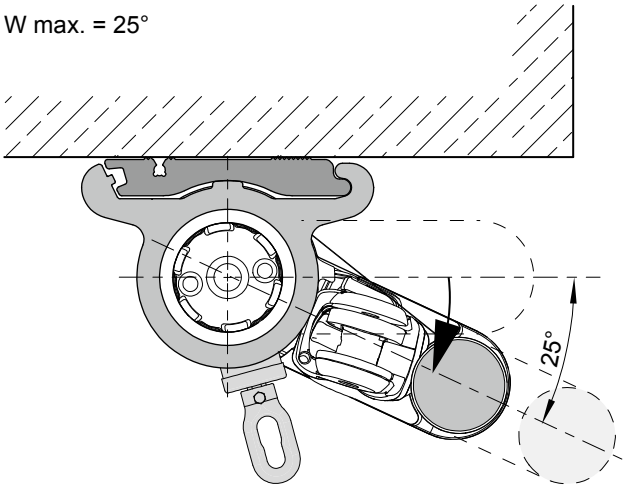

Face fixture, manual gearbox operation, max. pitch 55°

Operation from the rear

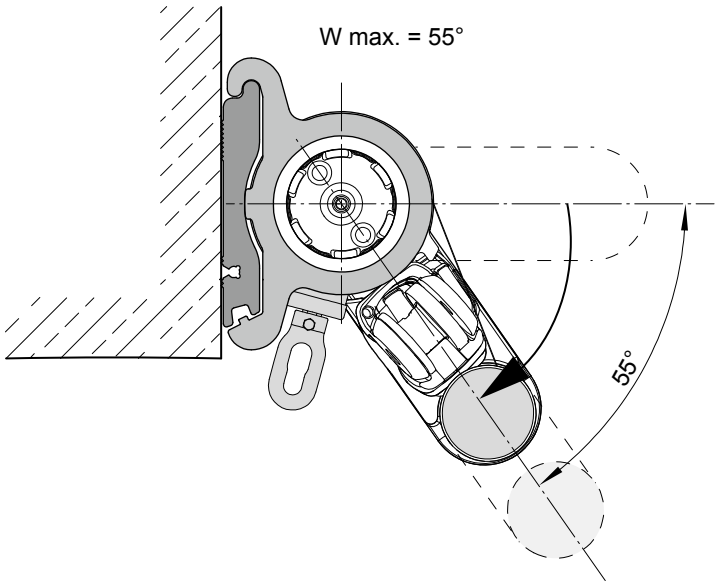

Top fixture, manual gearbox operation, max. pitch 55°

Operation from the rear

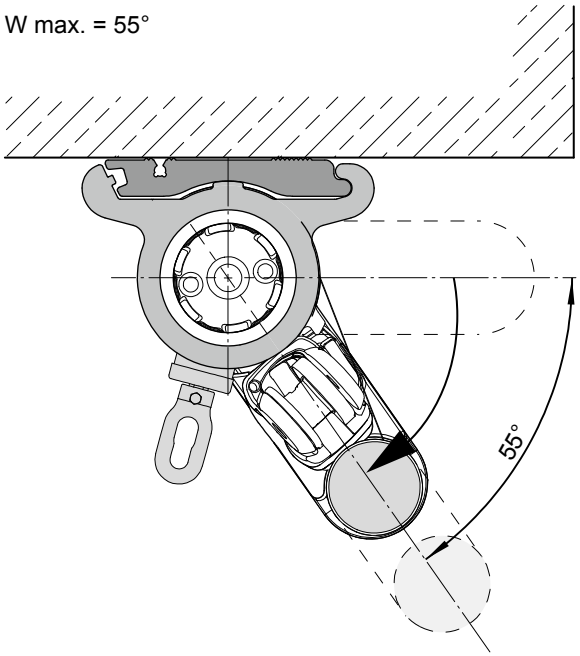

Face fixture, motor operation, pitch 5°-80°

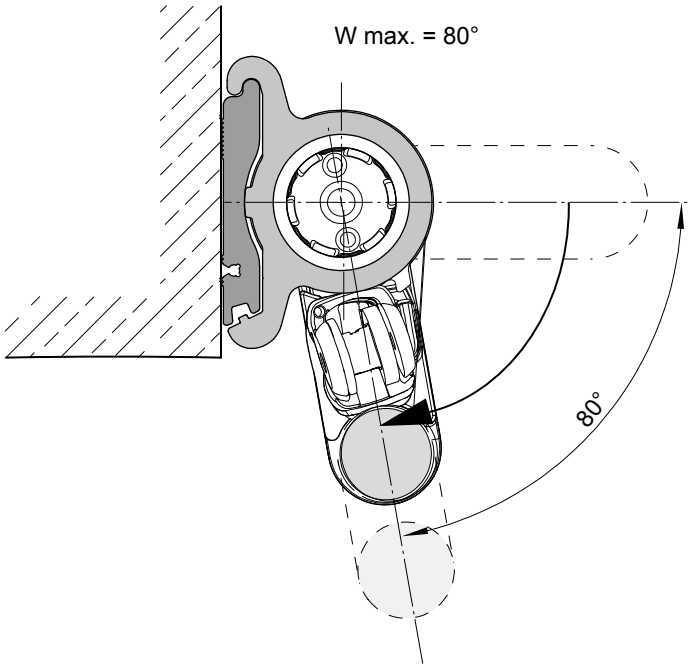

Top fixture, motor operation, pitch 5°-80°

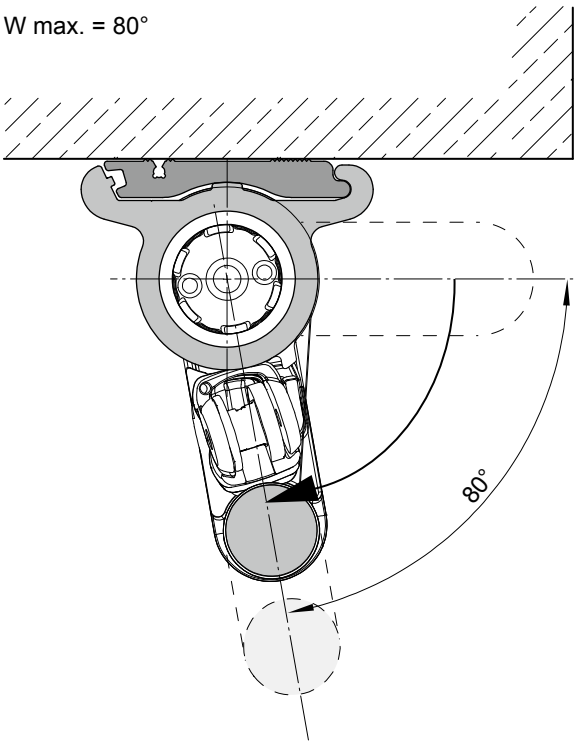

01 02 03 04 05 06 07 08 09 10 11 12 **13** 14 15 16 17

Motor cable exit point

Face fixture

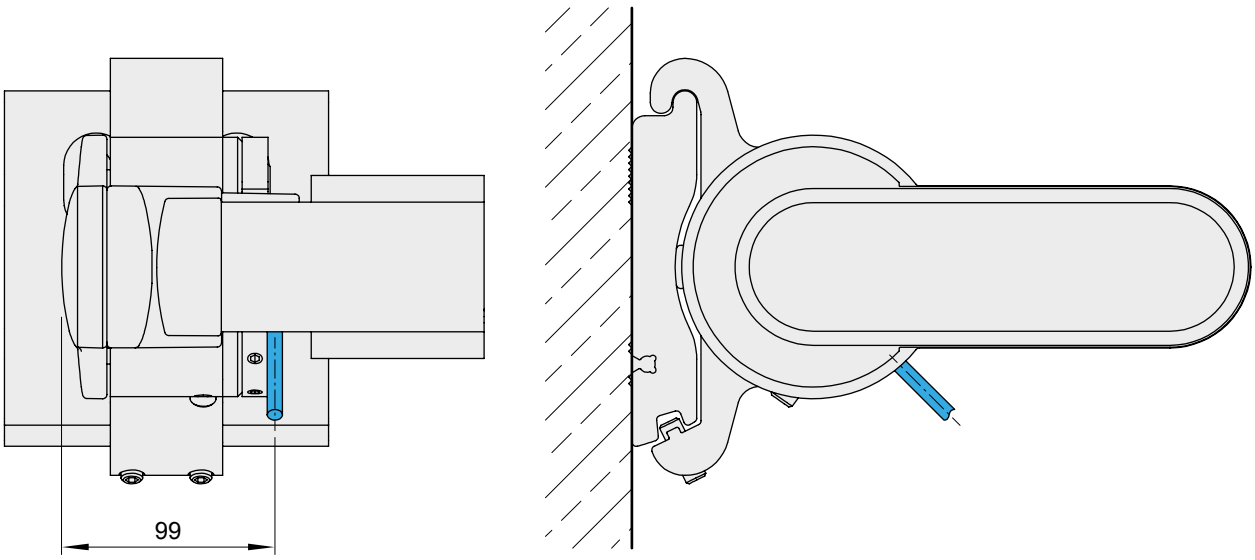

dimensions in mm