Open style folding-arm awning

markilux 1700

The classic torque bar awning with a designer look.
Technology laid bare with an award-winning appearance.

reddot design award
winner 2012

German
Design Award

NOMINEE 2014

markilux.com

markilux
safe timeless beautiful

Product characteristics

Wind resistance class 2
Beaufort 5 → 7.5–10.4 m/s → 28–37 km/h → 17–23 mph

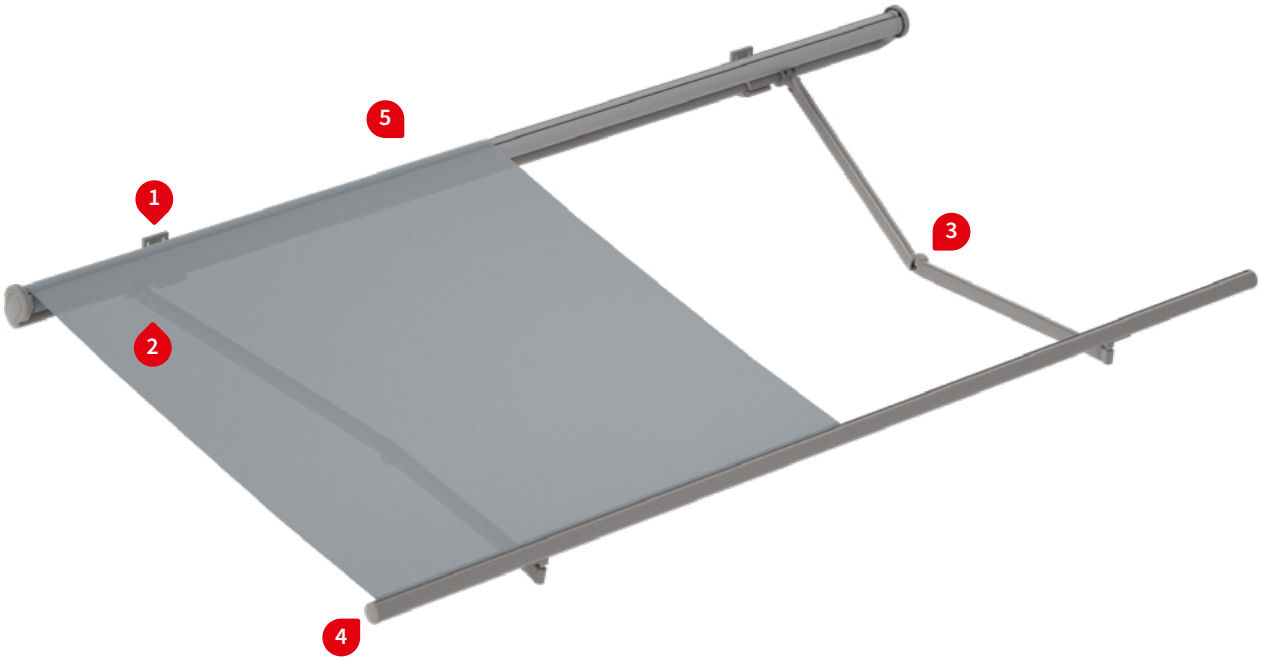

1 face fixture

1 face fixture, maximum pitch of 50°

1 top fixture

2 gearbox with eye for crank handle

during extension

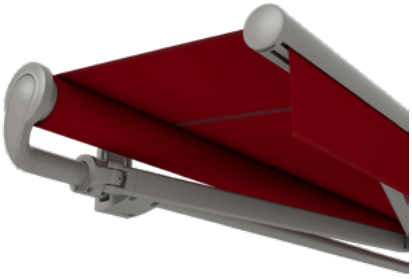

3 bionic tendon made of high-tech fibres for optimum power transference

4 special water drainage method and cover pocket hidden in the front profile

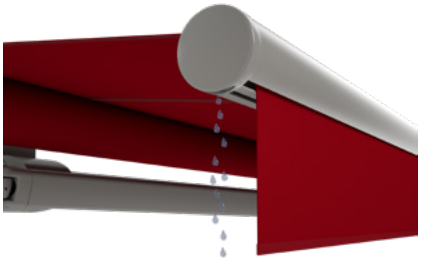

5 aluminium coverboard [1)]

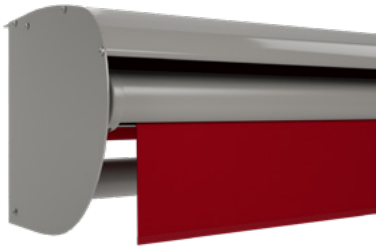

1) optional configuration

Product characteristics

01 02 03 04 05 06 07 08 09 10 11 12 13 14 15 16 17

Description

- open folding-arm awning with innovative arm technology suitable for shading large areas.

Special features

- awning with an extremely torsion-resistant, round torque bar which gives a certain degree of flexibility when choosing the fixture points
- round, fluid transition from the round torque bar to the round roller tube
- ingenious pitch adjustment – the angle of the awning is adjusted via the fixture bracket

Dimensions

- cassette in the standard version: depth 236 mm, height 216 mm
- single unit: minimum width 167 cm at the smallest projection of 150 cm, maximum width 700 cm at the largest projection of 400 cm
- also available as a coupled unit

Roller tube and lateral bearings

- round roller tube Ø 85 mm with keyway, galvanised steel – excellent stability, ensures near perfect cover performance even at the largest widths
- the roller support bracket is made of die-cast aluminium, powder coated, with integrated hidden cable canal when motor driven

Awning profiles

- extruded aluminium, in façade quality, powder coated
- circular front profile with integrated gutter
- round steel torque bar Ø 50 mm, galvanised both inside and out, powder coated

Folding arms

- profiles in extruded aluminium, in façade quality, powder coated
- moving parts made of drop-forged aluminium – the arms are therefore extremely fracture resistant
- pivot bolts in stainless steel run in Teflon-coated bronze bushes – practically maintenance free, virtually silent and extremely hard-wearing
- power transference via the innovative Bionic tendon at the elbow joint, made of high tensile, hightech fibres – low in friction, noiseless, insensitive to corrosion and UV resistant, independently tested by the Fraunhofer Institute

Side caps

- the roller support bracket insert sections are made of high-quality plastic, powder coated or in a polished chrome finish
- the front profile end caps are made of high-quality plastic, powder coated or in polished chrome, with drainage holes

Fixture brackets

- face fixture, top fixture, eaves fixture
- extruded aluminium, powder coated
- pitch range 5°–50°, infinitely adjustable
- spacer plates, stand-off brackets and other accessories are available

Frame and end cap colours

markilux frame colours without surcharge

traffic white RAL 9016

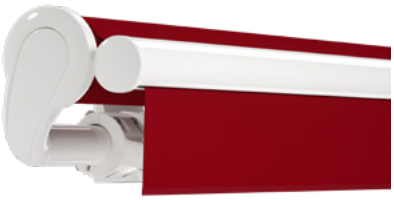

metallic aluminium RAL 9006

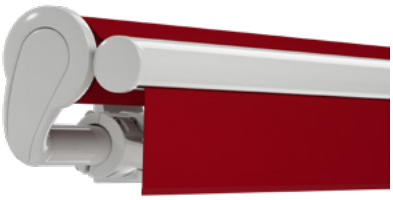

grey brown, similar to RAL 8019

off-white textured finish, 5233 [1)]

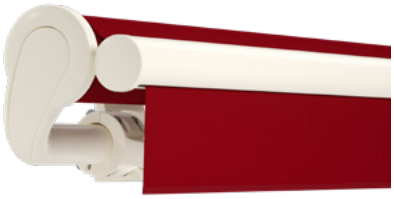

stone grey metallic, 5215 [1)]

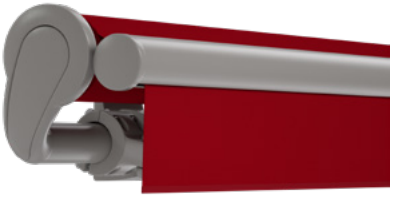

anthracite metallic, 5204 [1)]

Havana brown textured finish, 5229 [1)]

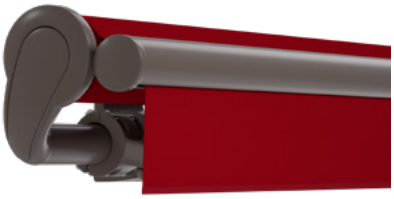

off-white textured finish, 5233 [1)]
insert and front profile end cap
in polished chrome

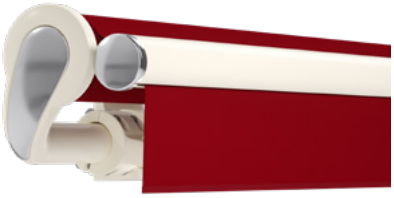

stone grey metallic, 5215 [1)]
insert and front profile end cap
in polished chrome

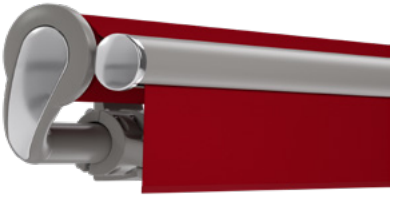

anthracite metallic, 5204 [1)]
insert and front profile end cap
in polished chrome

Combination options – possible in any frame colour.

Non-standard powder-coated finish

Bespoke frame colours at a surcharge – matt, metallic and pearl finishes as well as other colour ranges (DB, Tiger etc.) on request. All frame colours are available at a surcharge with enhanced corrosion protection.

1) textured finish

Colours may differ slightly from those depicted in both hue and finish.

Dimensions and configuration options

Single unit

		Overall awning width										Minimum width				
		250	300	350	400	450	500	550	600	650	700 [1]	Motor			Crank handle	
Order dimensions		167 – 250	251 – 300	301 – 350	351 – 400	401 – 450	451 – 500	501 – 550	551 – 600	601 – 650	651 – 700	2	+2	3	2	+2
H	150	2)										180	167	—	182	169
	200	2)										230	217	—	232	219
	250	—	2)									280	267	—	282	269
	300	—	—	2)								330	317	—	332	319
	350	—	—	—	2)					2)		380	367	630	382	369
	400 [1]	—	—	—	—	2)				—		430	417	680	432	419

dimensions in cm

1) = only available with motor drive (surcharge)
2) = observe the minimum widths!
H = extension

= 2 folding arms, 2 brackets
= 2 folding arms, 3 brackets
= 3 folding arms, 4 brackets, 2 rolltex bearings

= 2 standard arms
= 2 bespoke arms (surcharge)
= 3 standard arms

Operation	standard	optional
crank handle	✓	—
spring-assisted crank handle	—	✓
hard-wired motor	—	✓
silentec motor (optionally with an external io / RTS receiver) [1]	—	—
radio-controlled motor io, 868 MHz	—	✓
radio-controlled motor RTS, 433 MHz	—	✓
radio-controlled motor RTS, 433 MHz with manual override [1]	—	—

1) for awnings with a maximum of 2 arms

Coupled Awning (only with motor drive) [1]
2 fields, 1 motor, maximum width 1390 cm
3 fields, 1 motor, maximum width 1950 cm
junction roller
optionally with a one-piece cover (maximum of 2 fields / projection 350 cm / 15° pitch)

1) N.B! Important background information can be found in the chapter "General Information", in the section "Coupled Awnings".

Awning cover	fabric range no.	standard	optional
sunvas	301.. / 309..–315..	✓	—
perla	370 ..	—	✓
sunsilk	324.. / 325.. / 328.. / 369..	✓	—
perla FR	374.. / 375..	—	✓
perfotex	331.. / 332..	—	—
transolair	338..	—	—
vuscreen Alu	317..	—	—
Soltis Perform 92	92-20..	—	—
glass fibre screen	272..	—	—
valance, height 20 cm		✓	—

Shadeplus / drop valance
not available

Optional accessories

aluminium coverboard
infrared heater 2500 W
infrared heater 2500 W with integrated radio-controlled receiver 868 MHz io
LED spotline – light bar 110 × 70 mm with 5 W LED spotlights, width 180 cm / 3 spots or 300 cm / 5 spots
LED spotline io – light bar 110 × 70 mm with 5 W LED spotlights with integrated dimmable radio-controlled receiver, width 180 cm / 3 spots or 300 cm / 5 spots
automatic controls (light, wind, rain)

N.B! Important background information can be found in the chapter “Optional Accessories”.

Fixture brackets

wall bracket 100 mm	70867.
wall bracket 45 mm	71813.
spreader plate A 430 × 160 × 12 mm	75326.
spreader plate B 300 × 400 × 12 mm	75325.
markilux panel 250 × 230 × 49 mm	76308.
markilux panel continuous	76380.
stand-off bracket wide 80–300 mm	77968.
stand-off bracket narrow 80–300 mm	77967.
top fixture bracket 90 mm	70868.
top fixture bracket 45 mm	71818.
eaves fixture bracket 90 mm, 150 mm plate	71612.
eaves fixture bracket 90 mm, 270 mm plate	71659.
flat plate and angled bracket for eaves fixture, machine finish aluminium, 500 mm plate	716620
spreader plate 260 × 60 × 12 mm for eaves fixture bracket	75383.

Bracket fixture range

Awning with 2 folding arms

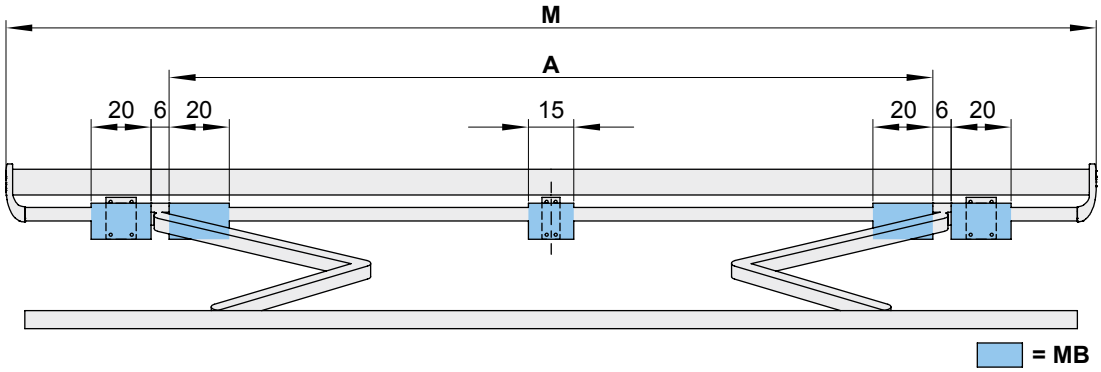

dimensions in cm

Order dimensions		Overall awning width								
		250	300	350	400	450	500	550	600	650
		180 – 250	251 – 300	301 – 350	351 – 400	401 – 450	451 – 500	501 – 550	551 – 600	601 – 650
		Arm position A								
H	150	154 1)	210	240	280	320	390	425	460	500
	200	204 2)	210 1)	240	280	320	390	425	460	500
	250	—	254 2)	260 1)	280	320	390	425	460	500
	300	—	—	304 2)	310 1)	320	390	425	460	500
	350	—	—	—	354 2)	360 1)	390	425	460	—
	400	—	—	—	—	404 2)	420 1)	425	460	—
	BHT	No. of brackets | No. of fixing points								
W	4,5	—						1 | 2		
	10	2 | 6						2 | 6		
BP		**A** 2 | 16 **B** 2 | 8						**A** 2 | 16 **B** 2 | 8		
DP		—						1		
PA		2 | 8						3 | 12		
DE	4,5	—						1 | 2		
	9	2 | 8						2 | 8		
DA	9	2 | 8						3 | 12		

dimensions in cm

If the brackets cannot be positioned in accordance with this table, make sure the actual measurements are noted on the order form!

1) = coupled awning in intermediate widths available on request with junction roller

2) = please note the minimum widths! Dimension A is only valid for standard arms! Dimension A is 13 cm smaller in the case of bespoke arms. In the case of small awnings the brackets can only be fitted inside the arms, i.e. the position denoted by measurement A. Coupled units are not available with junction roller.

The **pull-out forces** necessary for determining the correct fixing materials necessary to meet wind resistance class 2 (Beaufort 5) can be found in the password-protected dealer area of the markilux.com website under “Pull-out Forces”.

A = arm position
BHT = bracket width
BP = spreader plate A or B, to be positioned behind the folding arm
DA = eaves fixture bracket
DE = top fixture bracket
DP = spacer plate 71826., to be positioned near to the cassette support in the case of spreader plate A or B
H = *order dimension* = extension
M = *order dimension* = awning width
MB = bracket fixture range
PA = markilux panel, fixture profile, width 250 mm
W = face fixture bracket

Bracket fixture range

Awning with 3 folding arms

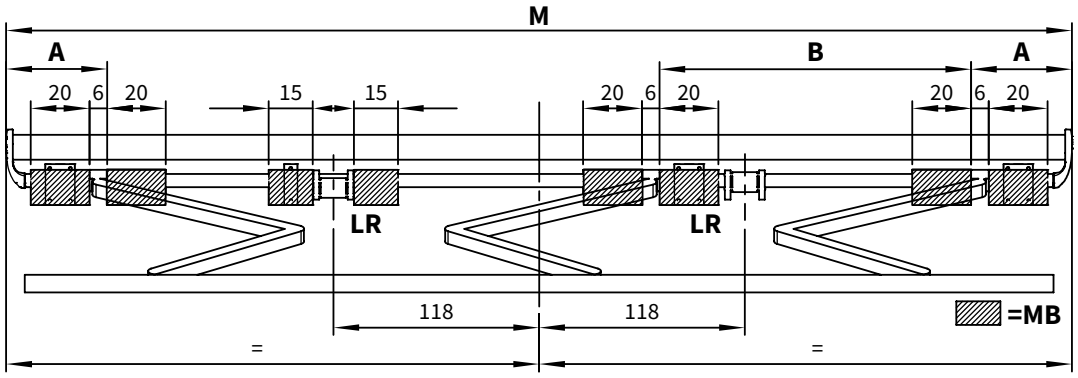

dimensions in cm

Order dimensions		Overall awning width							
		650		700					
		630 – 650		651 – 664		665 – 679		680 – 700	
		Arm position							
		A	B	A	B	A	B	A	B
H	150	—	—	55	235	55	245	55	245
	200	—	—	55	225	55	235	55	235
	250	—	—	55	215	55	225	55	225
	300	—	—	45	210	55	215	55	215
	350	13 [1]	215 [1]	23 [1]	215 [1]	31 [1]	225 [1]	38	225
	400	—	—	—	—	—	—	13 [1]	230 [1]

	BHT	No. of brackets | No. of fixing points
W	4,5	1 | 2
	10	3 | 9
BP		**A** 3 | 24 **B** 3 | 12
DP		1
PA		4 | 16
DE	4,5	1 | 2
	9	3 | 12
DA	9	4 | 16

dimensions in cm

If the brackets cannot be positioned in accordance with this table, make sure the actual measurements are noted on the order form!

The **pull-out forces** necessary for determining the correct fixing materials necessary to meet wind resistance class 2 (Beaufort 5) can be found in the password-protected dealer area of the markilux.com website under “Pull-out Forces”.

1) = coupled units are not available with junction roller
A, B = arm position
BHT = bracket width
BP = spreader plate A or B, to be positioned behind the folding arm
DA = eaves fixture bracket
DE = top fixture bracket
DP = spacer plate 71826., to be positioned near to the left rolltex bearing in the case of fixture with spreader plate A or B
H = *order dimension* = extension
LR = rolltex bearing
M = *order dimension* = awning width
MB = bracket fixture range
PA = markilux panel, fixture profile, width 250 mm
W = face fixture bracket

Overall unit height at different pitch settings

Face fixture

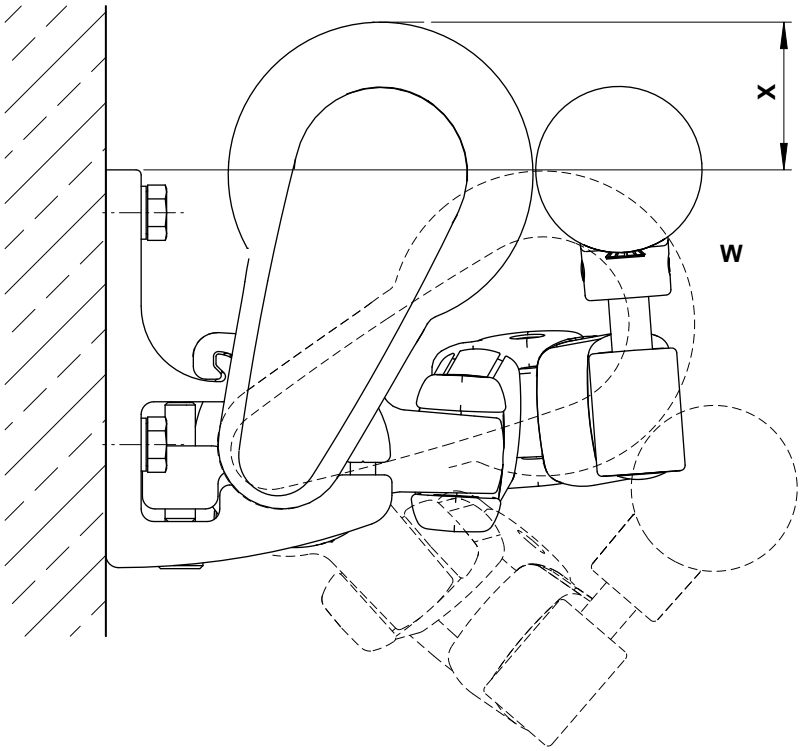

pitch (W)	approx. height in mm (X)
5°	59
10°	55
15°	50
20°	45
25°	39
30°	32
35°	25
40°	17
45°	8
50°	0

Top fixture

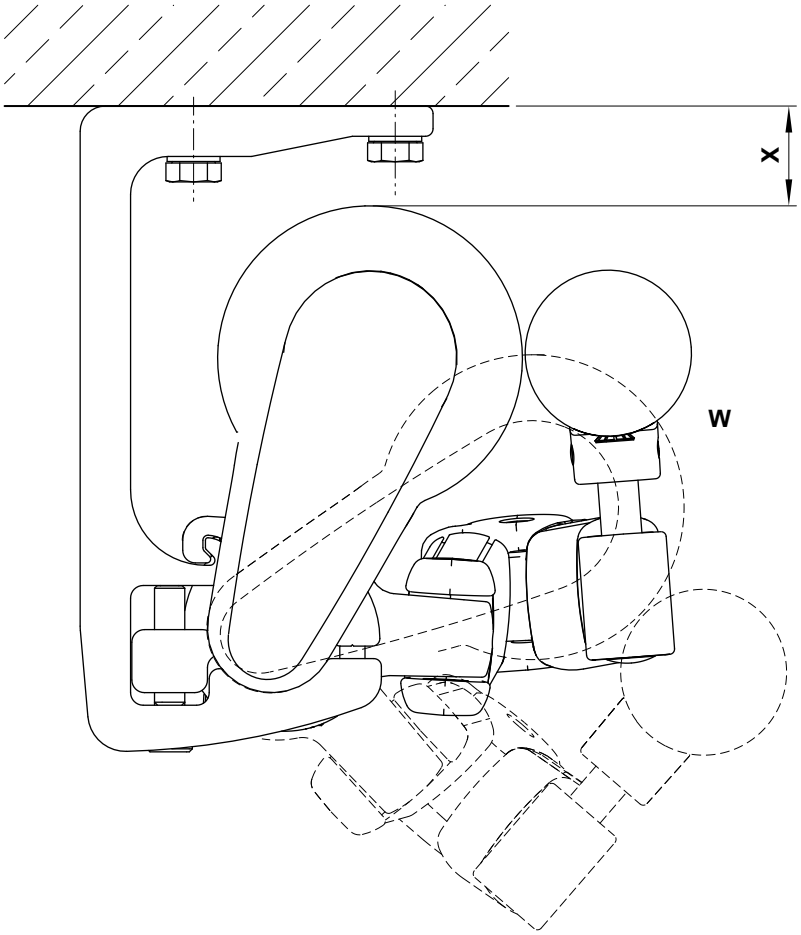

pitch (W)	approx. height in mm (X)
5°	40
10°	44
15°	48
20°	54
25°	60
30°	66
35°	74
40°	82
45°	90
50°	99

Face fixture

Fixtures, fittings and accessories

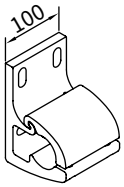

face fixture bracket

100 mm

70867.

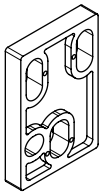

spacer plate

100 × 150 × 20 mm

N.B!
Stack to a max. height of 200 mm

758831

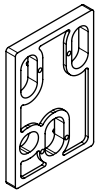

spacer plate

100 × 150x × 12 mm

758841

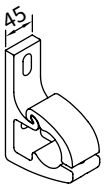

face fixture bracket

for central fixture, depending on size

45 mm

71813.

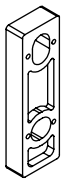

spacer plate for face fixture
45 × 150 × 20 mm

N.B!
stack to a max. height of 200 mm

718251

spacer plate for face fixture

45 × 150 × 12 mm

71826.

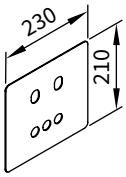

cover plate
for spacer plate
and stand-off brackets
in the case of external insulation

230 × 210 × 2 mm

71843.

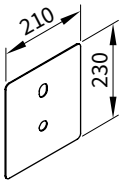

cover plate
for spacer plate
and stand-off brackets
in the case of external insulation

210 × 230 × 2 mm

71844.

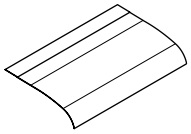

Coverboard incl. additional profile and rubber sealing strip

72015., 72019., 75970.

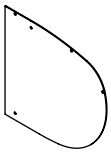

End cheeks for
the coverboard,
282 × 87 × 2 mm

72043.

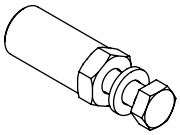

bolt reduction assembly

pack 10 pcs

M 16 → M 12 | M 16 → M 10 | M 12 → M 10 | M 10 → M 10

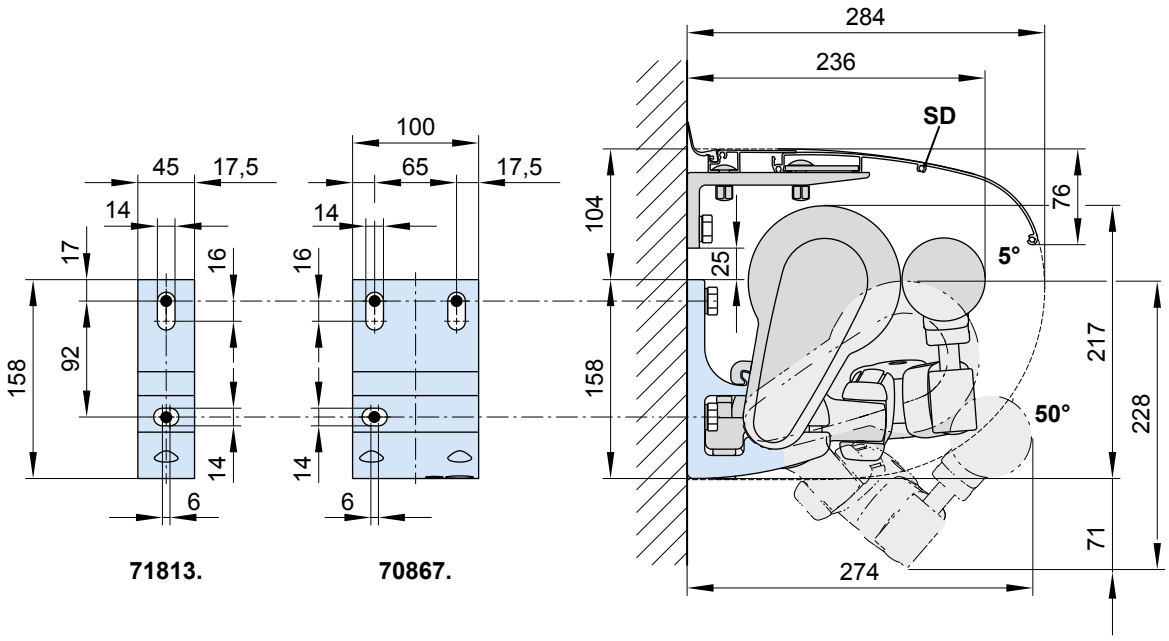

SD = coverboard

dimensions in mm

Face fixture with spreader plate A

Fixtures, fittings and accessories

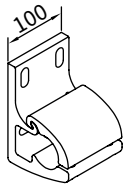

face fixture bracket

100 mm

70867.

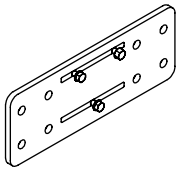

spreader plate A
face fixture

160 × 430 × 12 mm

75326.

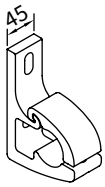

face fixture bracket

for central fixture, depending on size

45 mm

71813.

spacer plate for face fixture

45 × 150 × 12 mm

71826.

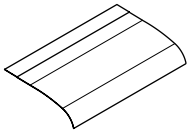

Coverboard incl. additional profile and rubber sealing strip

72015., 72019., 75970.

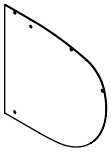

End cheeks for the coverboard, 282 × 87 × 2 mm

72043.

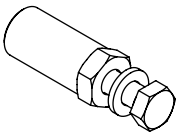

bolt reduction assembly

pack 10 pcs

M 16 → M 12	M 16 → M 10	M 12 → M 10	M 10 → M 10

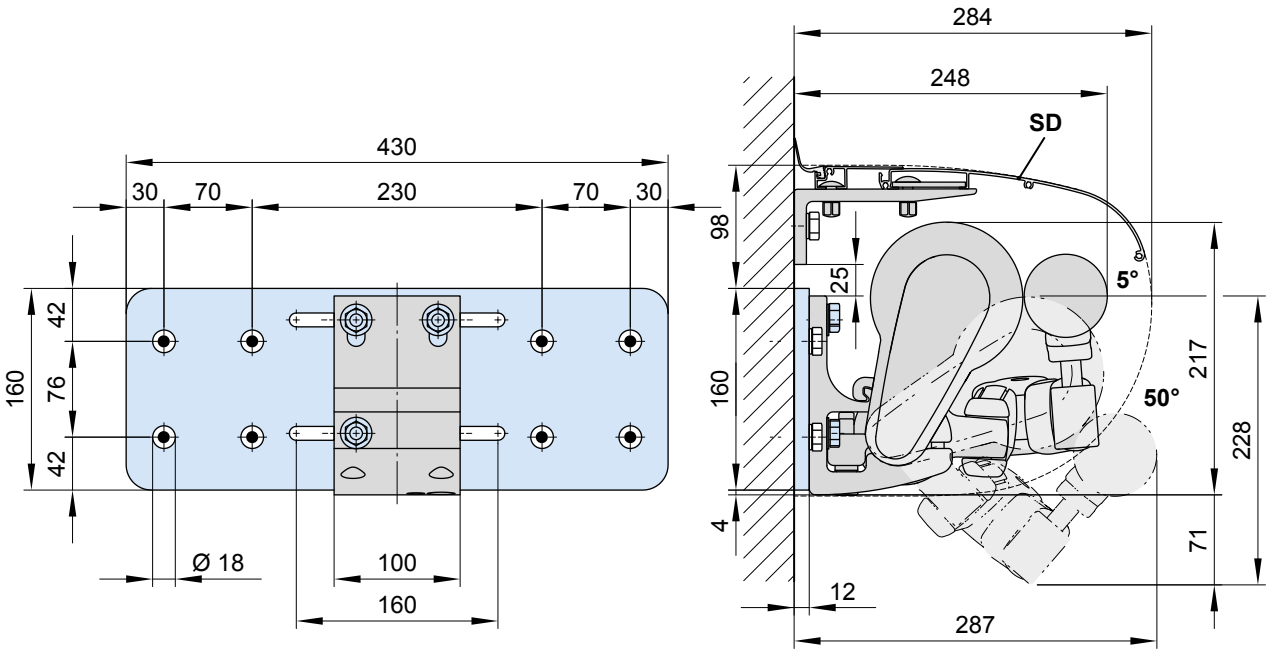

SD = coverboard

dimensions in mm

Face fixture with spreader plate B

Fixtures, fittings and accessories

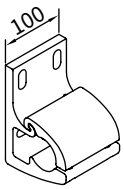

face fixture bracket

100 mm

70867.

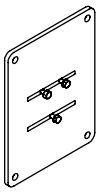

spreader plate B
face fixture

300 × 400 × 12 mm

75325.

spacer plate for
face fixture

45 × 150 × 20 mm

71826.

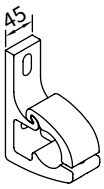

face fixture bracket

for central fixture,
depending on size

45 mm

71813.

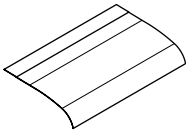

Coverboard incl. additional profile and rubber sealing strip

72015., 72019., 75970.

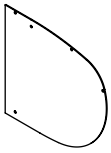

End cheeks for
the coverboard,
282 × 87 × 2 mm

72043.

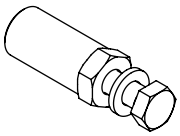

bolt reduction
assembly

pack 10 pcs

M 16 → M 12	M 16 → M 10	M 12 → M 10	M 10 → M 10

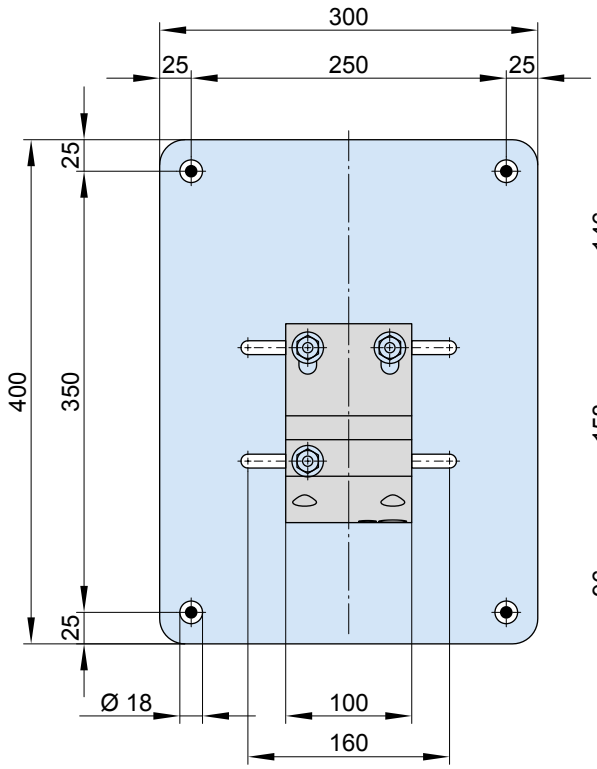

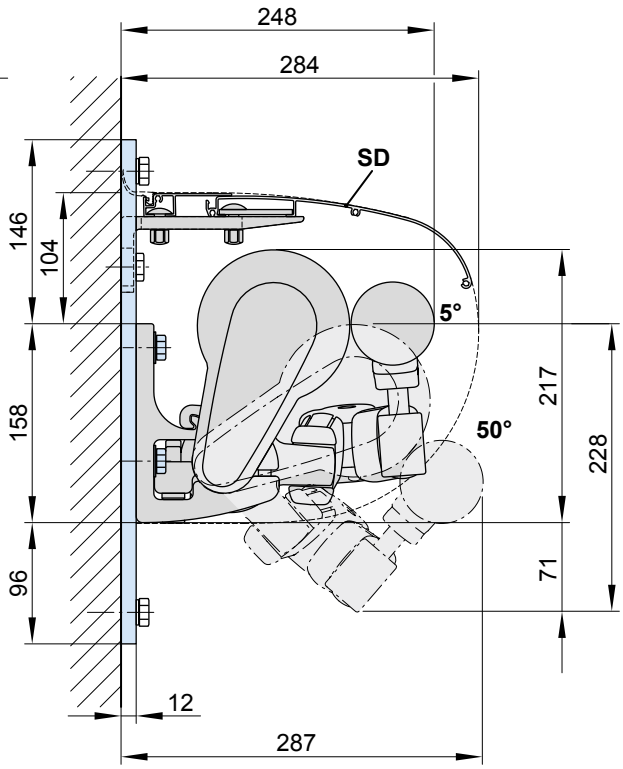

SD = coverboard

dimensions in mm

Face fixture with markilux panel 250 mm

Fixtures, fittings and accessories

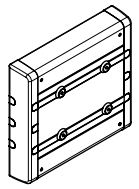

markilux panel 250 mm fixture profile

with decorative profiles and end caps

250 × 230 × 49 mm

76308.

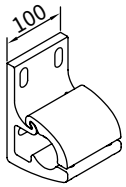

face fixture brackets

100 mm

70867.

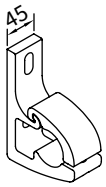

face fixture brackets

for central fixture, depending on size

45 mm

71813.

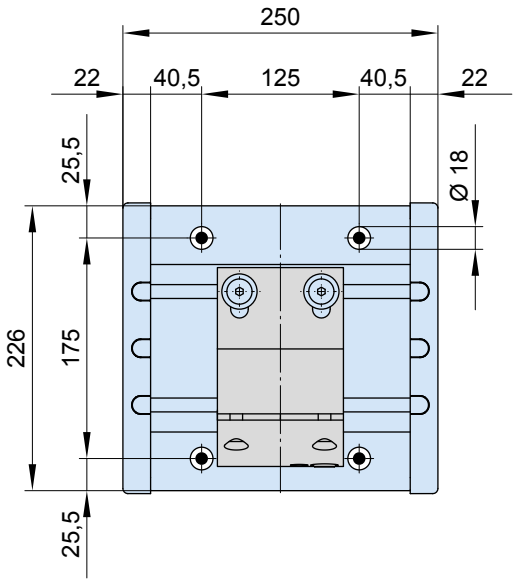

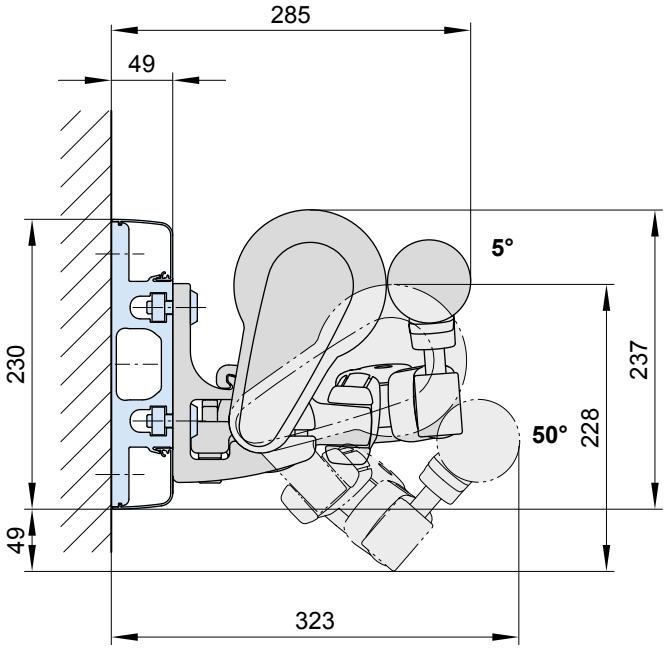

dimensions in mm

Face fixture with markilux panel continuous

Fixtures, fittings and accessories

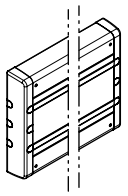

markilux panel 250 mm fixture profile

with decorative profiles and end caps

continuous

76380.

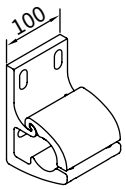

face fixture brackets

100 mm

70867.

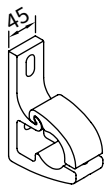

face fixture brackets

for central fixture, depending on size

45 mm

71813.

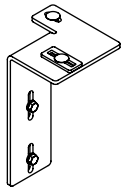

Coverboard brackets

76390.

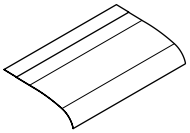

Coverboard incl. additional profile and rubber sealing strip

72015., 72019., 75970.

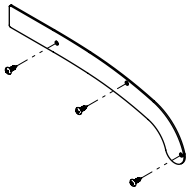

End cheeks for the coverboard, 282 × 87 × 2 mm

and

3 fillister head self-tapping screws

76469. und 3 × 735611

As a **continuous fixture profile**, the markilux panel will always be supplied to order on the basis of a technical drawing prepared in the factory in accordance with the awning specification.

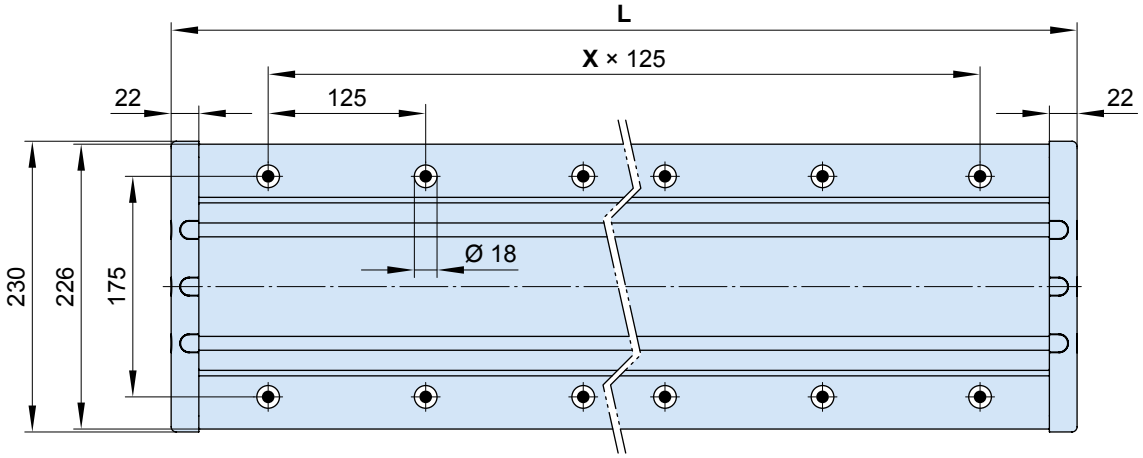

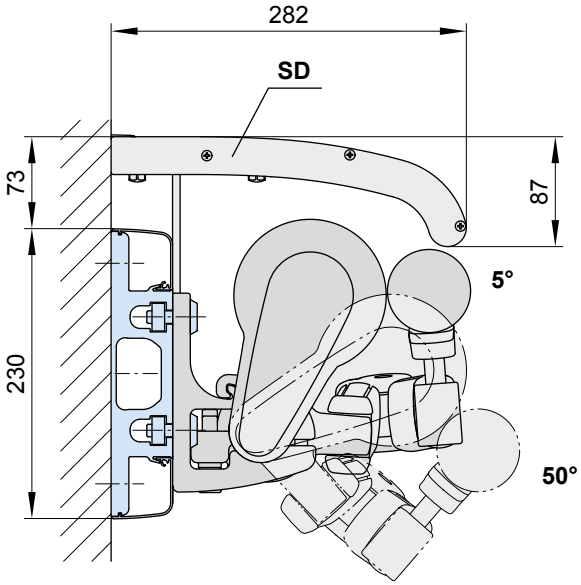

L = individual width, max. 7000 mm

X = fixing point separation, **by way of example**

SD = coverboard

dimensions in mm

Face fixture with stand-off bracket

Fixtures, fittings and accessories

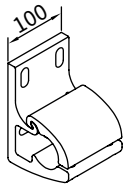

face fixture bracket

100 mm

70867.

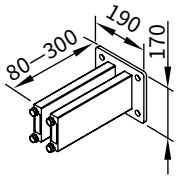

guide rod bracket
for face fixture bracket
70867.

77968.

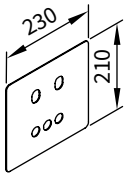

cover plate
for spacer plate
and stand-off brackets
in the case of external
insulation

230 × 210 × 2 mm

71843.

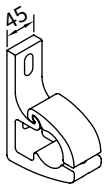

face fixture bracket

for central fixture,
depending on size

45 mm

71813.

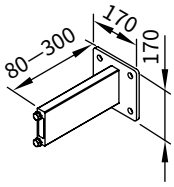

guide rod bracket
for face fixture bracket
71813.

77967.

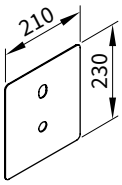

cover plate
for spacer plate
and stand-off brackets
in the case of external
insulation

210 × 230 × 2 mm

71844.

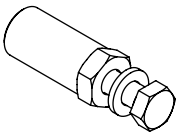

bolt reduction
assembly

pack 10 pcs

M 16 → M 12	M 16 → M 10	M 12 → M 10	M 10 → M 10

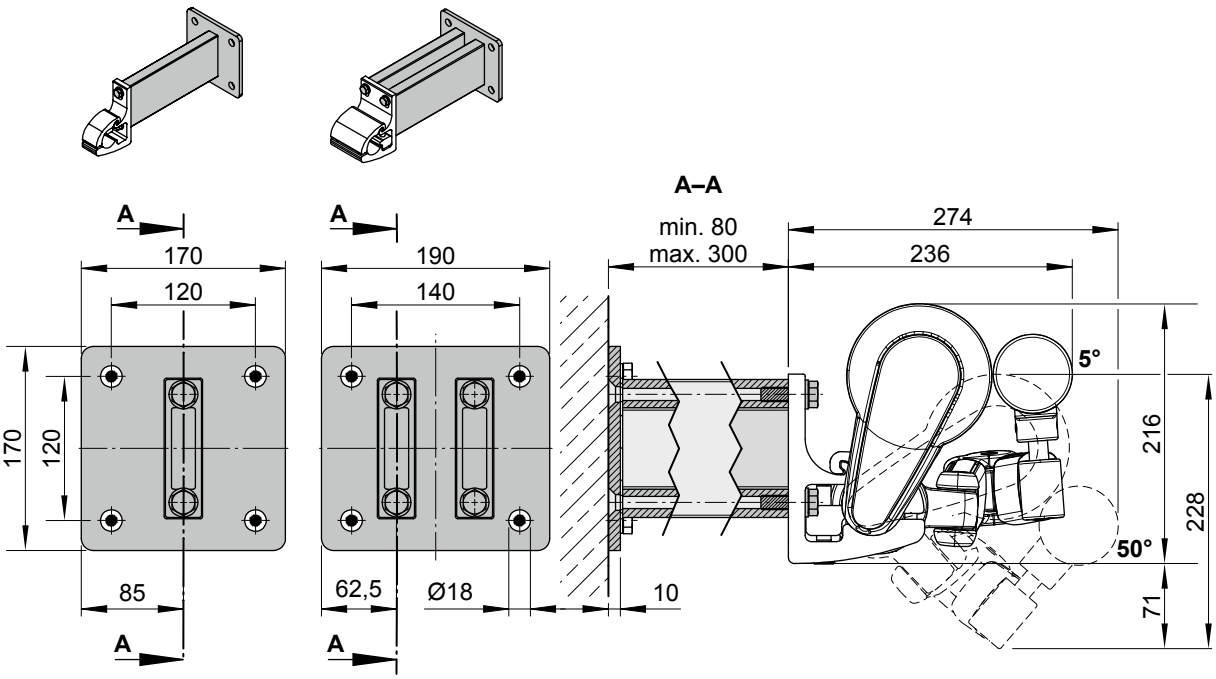

dimensions in mm

Top fixture

Fixtures, fittings and accessories

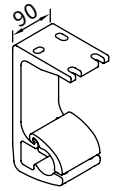

top fixture bracket

90 mm

70868.

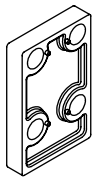

spacer plate for top fixture

90 × 140 × 20 mm

N.B!
stack to a max. height of 200 mm

716311

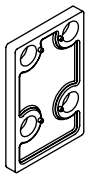

spacer plate for top fixture

90 × 140 × 12 mm

716411

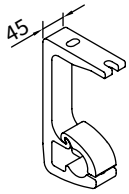

top fixture bracket

additional bracket for 3 folding arms

71818.

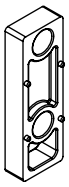

spacer plate for top fixture

45 × 140 × 20 mm

N.B!
stack to a max. height of 200 mm

716261

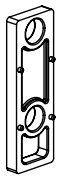

spacer plate for top fixture

45 × 140 × 12 mm

716371

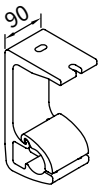

top fixture bracket

N.B!
The pull-out forces are doubled compared to those of top fixture bracket 70868.

70869.

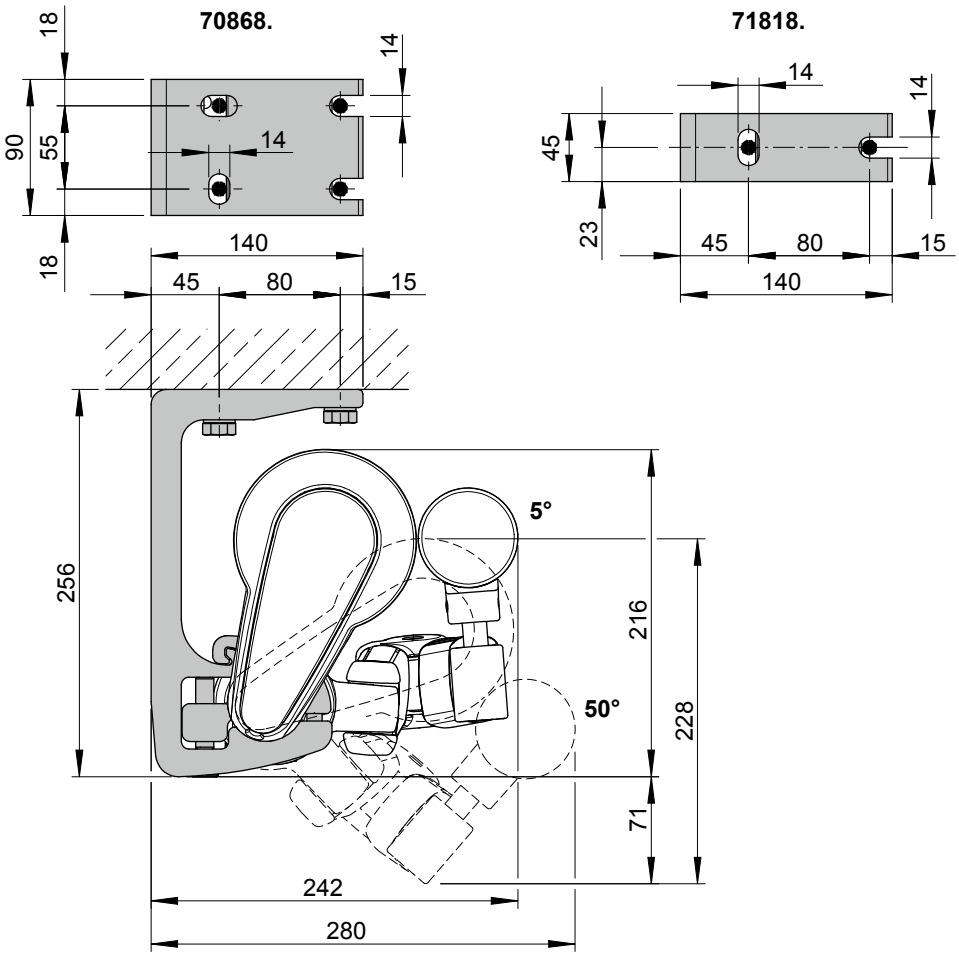

dimensions in mm

Eaves fixture

Fixtures, fittings and accessories

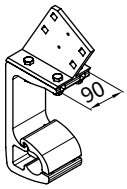

eaves fixture bracket

complete set

height of flat plate: 150 mm

90 mm

70871.

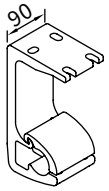

top fixture bracket

90 mm

70868.

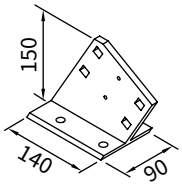

eaves fixture bracket

150 mm plate

71612.

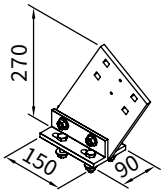

eaves fixture bracket
270 mm plate

See “Eaves fixture with spreader / backing plate”

71659.

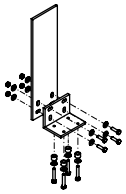

flat plate and angled bracket for eaves fixture

machine finish

716620

With eaves fixture bracket, 150 mm plate (71612.)

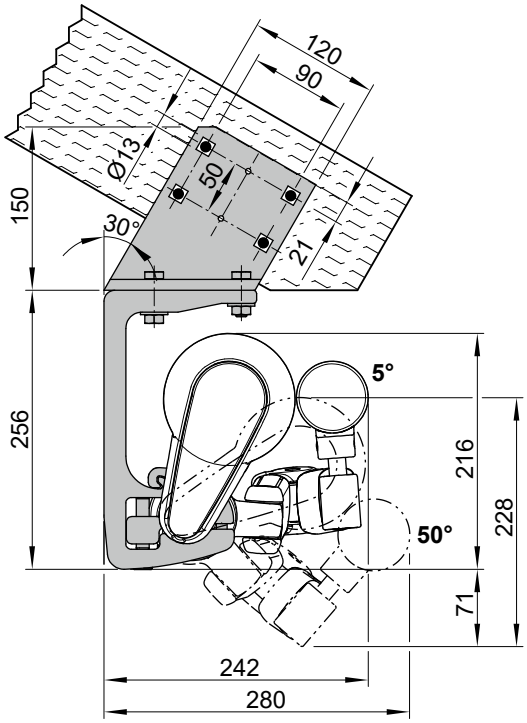

With eaves fixture bracket, 270 mm plate (71659.)

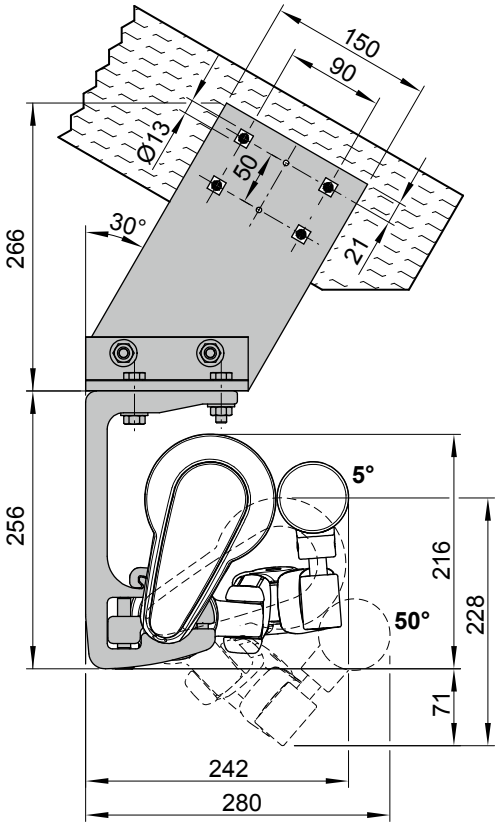

dimensions in mm

Eaves fixture with additional plate

Fixtures, fittings and accessories

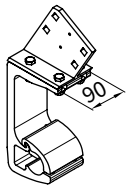

eaves fixture bracket

complete set

height of flat plate: 150 mm

90 mm

70871.

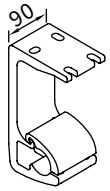

top fixture bracket

90 mm

70868.

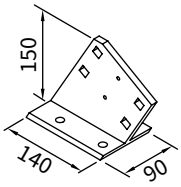

eaves fixture bracket

150 mm plate

71612.

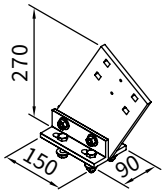

eaves fixture bracket
270 mm plate

see "Eaves fixture with spreader / backing plate"

71659.

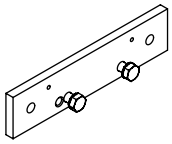

supplementary flat plate eaves fixture

260 × 60 × 12 mm

See "Eaves fixture with spreader / backing plate"

75383.

With eaves fixture bracket, 150 mm plate (71612.)

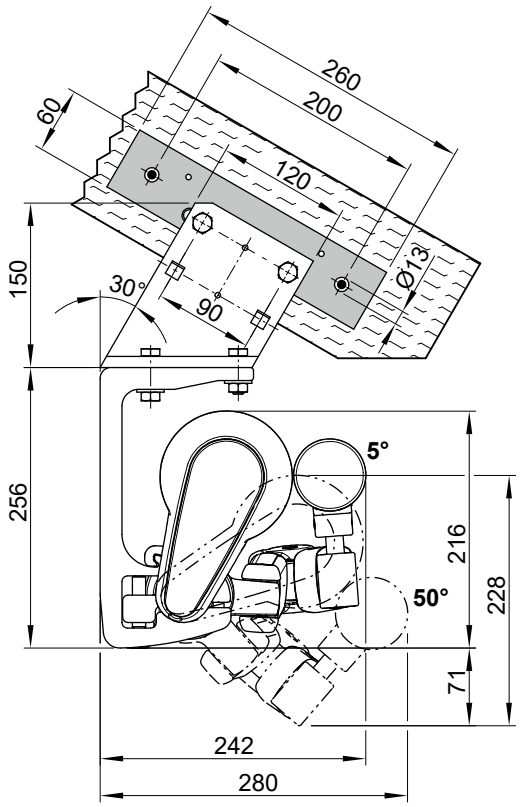

With eaves fixture bracket, 270 mm plate (71659.)

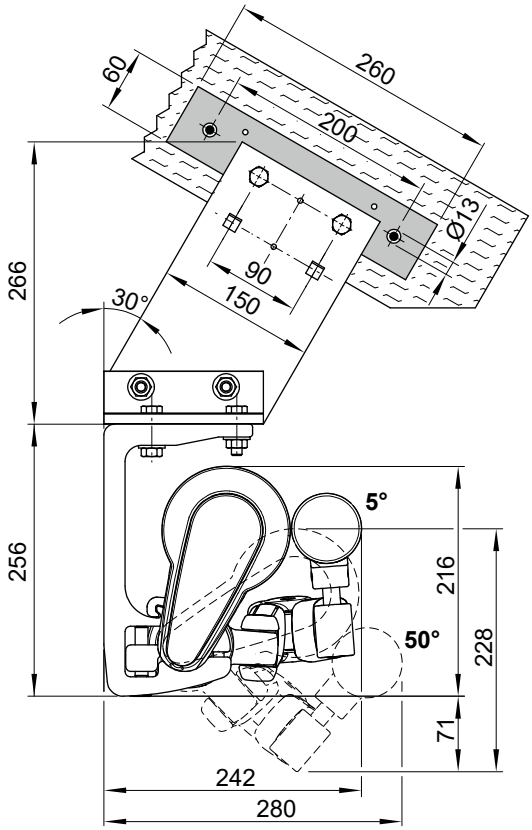

dimensions in mm

Eaves fixture with adjustable eaves fixture bracket

Fixtures, fittings and accessories

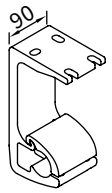

top fixture bracket

90 mm

70868.

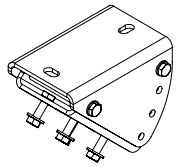

adjustable
eaves fixture bracket

71198.

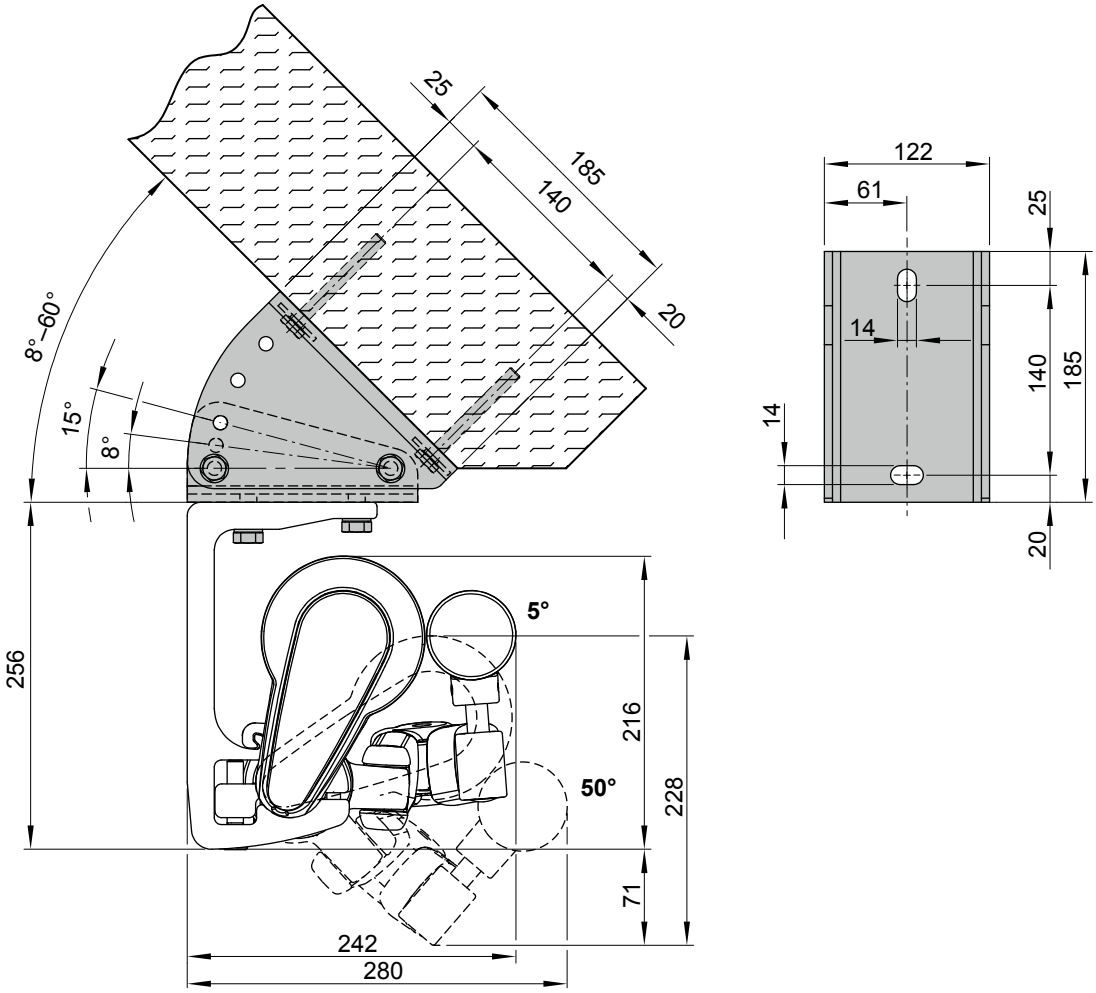

dimensions in mm

Face fixture, manual gearbox operation, dimensions at pitches between 5°–50°

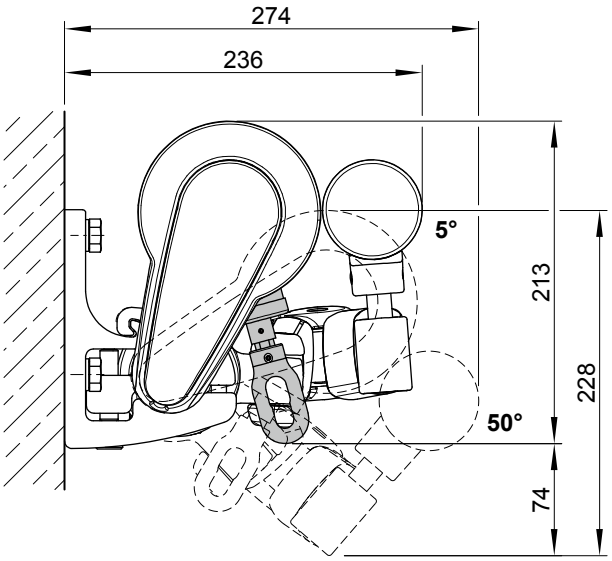

Motor cable exit point

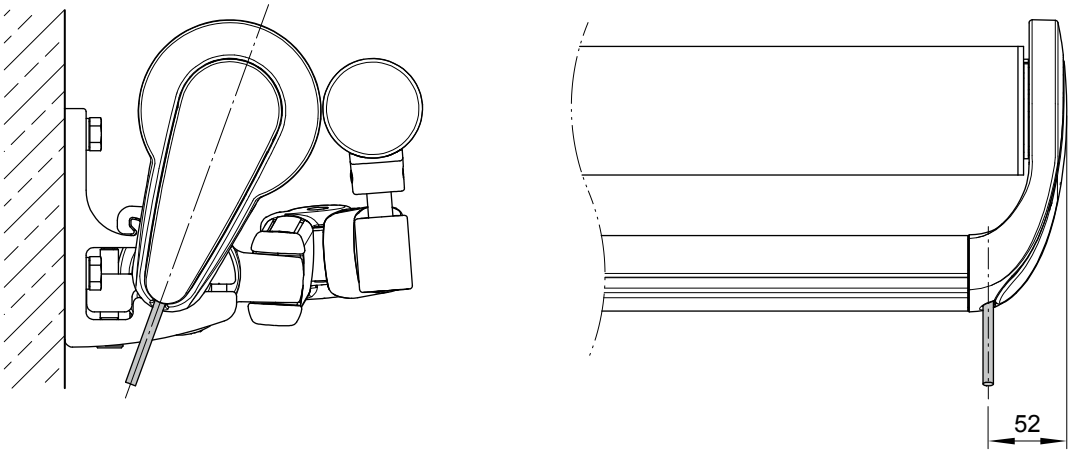

dimensions in mm